Buran
DC 0550 - DC 1175 AES / WB
Air cooled / water cooled Refrigeration Dryers

Air-cooled version
DC 0550 - DC 1175 AES

Water-cooled version
DC 0550 - DC 1175 WB

MAIN FEATURES & BENEFITS

- Refrigeration compressed air dryers with intelligent, energy-saving capacity control (air-cooled version) for economical compressed air drying
- 6 sizes for nominal volume flows of 550 to 1.175 m³/h allow an accurate selection of the appropiate refrigeration compressed air dryer to the respective operating volume flow
- In the energy-saving mode, the control of the refrigerant compressor, in conjunction with intelligent temperature and pressure control, permanently adjusts the energy consumption to the current operating conditions and at the same time ensures a constant pressure dew point
- Electronic level-controlled condensate drain on the heat exchanger ensure reliable condensate drainage depending on the amount of condensate without loss of compressed air. Includes function monitoring and alarm message
- The electronic controller including a display and indication of the current pressure dewpoint, operating hours, service messages, alarm messages and energy saving with multiple possible individual settings
- Compact und space-saving design with robust steel housing
- Scroll compressor In the cooling circuit ensures a reliable compression of the refrigerant at high running, low vibration and low noise operation

PRODUCT DESCRIPTION

Buran DC 0550 - DC 1175

For the energy-conscious user the new Buran DC refrigeration compressed air dryers are now available. In the air cooled version, this series includes an energy-saving control based on dew point-dependent switch on / off control of the refrigerant compressor in conjunction with a temperature and pressure control. This ensures an extremely stable dew point under all operating conditions and a power consumption proportional to the applied thermal load. Both the air-cooled and the water-cooled version are equipped with an electronic-level-controlled condensate drain on the heat exchanger, which ensures a safe condensate drainage depending on the amount of condensate, without loss of compressed air.

INDUSTRIES

- Chemical and electrical industry

- Maschine building industry and plant engineering/ construction

- Automotive industry

Donaldson Filtration Deutschland GmbH
Büssingstraße 1
D-42781 Haan • Germany
Tel. +49 2129 569 0
Fax +49 2129 569 100
CAP-de@donaldson.com
www.donaldson.com

F119005_ENG_03-2019

Technical alterations reserved (7/2019)

PRODUCT DESCRIPTION

Function Description

The warm, moisture-laden compressed air enters the air/ air heat exchanger and is precooled there by the incoming compressed air. The compressed air then flows into the air / refrigerant heat exchanger (**1b**). There, it is cooled to approx. 2°C, whereby water vapor is condensed and the liquid water is separated in the water separator and is discharged from the system via the electronically-controlled condensate drain (**21**). The cool, saturated compressed air then flows back through the air-to-air heat exchanger (**1a**) and is heated by the incoming compressed air and thus is under-saturated. The pressure dewpoint achieved depends on the design and operating conditions and is + 3°C at nominal operating conditions.

In the refrigeration circuit, the refrigerant is compressed in the refrigerant compressor (**6**) and then liquefied with the fan (**9**) in the condenser (**8**). Via a capillary tube (**11**) the liquid refrigerant is expanded and injected in the Air/ refrigerant heat exchanger (**1b**). The warm compressed air evaporates the refrigerant and the pressure is reduced and cooled by this phase change, which also cools the compressed air. The expanded and gaseous refrigerant is returned to the compressor.

The electrical control constantly monitors the evaporation pressure, the condensing pressure and the dew point temperature in the cooling circuit. The refrigerant compressor Is switched on and off depending on the dew point in the energy saving mode and thus adjusts the energy consumption of the actually required cooling energy proportionally.

Main Components

- Air/ air (**1a**) and air/ refrigerant heat exchanger (**1b**) with integrated water separator (**1c**)
- Electronic level-controlled condensate drain (**21**)
- Refrigerant compressor with switch on/ off control (**6**)
- Refrigerant condenser (**8**) with fan (**9**)
- Hotgas bypass control valve (**7**)
- Capillary tube (**11**)
- Dewpoint-temperature sensor (**12.1**)

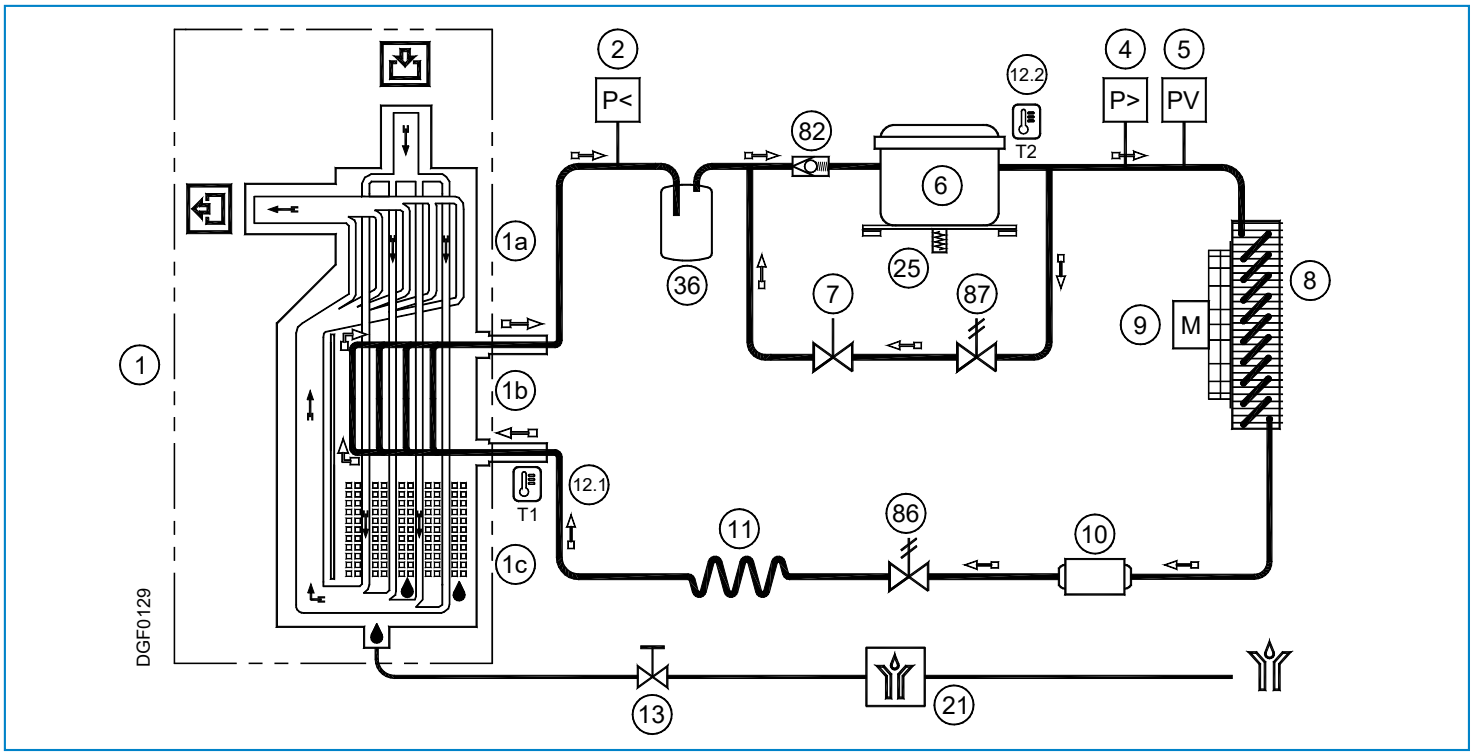

Donaldson® Ultrafilter

PRODUCT SPECIFICATIONS

Features	Benefits
Intelligent over-all concept	Type range, integrated monitoring and control functions as well as automatic condensate drain adapted for the use in central compressed air applications. Available in air or water cooled versions
6 sizes for nominal volume flows of 550 to 1.175 m³/h	Accurate selection of the appropriate refrigeration compressed air dryer to the respective operating volume flow
Intelligent, energy-saving capacity control based on dewpoint dependent switch on/ off control of the refrigerant compressor combined with temperature and pressure control	Permanently adjusting of the energy consumption to the current operating conditions for economical compressed air drying at a constantly low pressure dew point
Electronic level-controlled condensate drain on the heat exchanger	Safe condensate drainage depending on the amount of condensate, without loss of compressed air. Includes function monitoring and alarm meessage
Compact and space-saving design with robust steel housing	Low space requirements at the installation site, low storage space requirement and low transport costs
Electronic controller including a display and indication of the current pressure dewpoint, operating hours, service messages, alarm messages and energy saving with multiple possible individual settings.	Reliable monitoring of the operating status and timely display of required maintenance work; Remote monitoring via fault message possible
Scroll compressor in refrigeration circuit	Reliable compression of the refrigerant at high running, low vibration and low noise operation
Aluminium heat exchanger	No corrosion inside the heat exchanger due to contact with moist compressed air; Good heat transfer properties at low weight

PRODUCT SPECIFICATIONS

Type	Volume flow m³/h	Volume flow m³/min.	Differential pressure mbar	Cooling air requirement m³/h	Cooling water requirement (15°C) m³/h	Power consumption kW	Power supply
Air cooled version							
DC 0550 AES	550	9	160	1900	---	1,11	1~/ 230V/ 50Hz (±10%)
DC 0650 AES	650	11	230	1900	---	1,40	1~/ 230V/ 50Hz (±10%)
DC 0750 AES	750	12,5	80	2500	---	1,34	1~/ 230V/ 50Hz (±10%)
DC 0850 AES	850	14	100	3300	---	1,70	1~/ 230V/ 50Hz (±10%)
DC 1000 AES	1000	16,5	130	3300	---	1,85	1~/ 230V/ 50Hz (±10%)
DC 1175 AES	1175	19,5	180	3300	---	2,33	3~/ 400V/ 50Hz (±10%)
Water cooled version							
DC 0550 WB	550	9	160	---	0,14	0,95	1~/ 230V/ 50Hz (±10%)
DC 0650 WB	650	11	230	---	0,14	0,95	1~/ 230V/ 50Hz (±10%)
DC 0750 WB	750	12,5	80	---	0,15	1,15	1~/ 230V/ 50Hz (±10%)
DC 0850 WB	850	14	100	---	0,16	1,28	1~/ 230V/ 50Hz (±10%)
DC 1000 WB	1000	16,5	130	---	0,17	1,32	1~/ 230V/ 50Hz (±10%)
DC 1175 WB	1175	19,5	180	---	0,21	2,32	3~/ 400V/ 50Hz (±10%)

Operating pressure:	max. 14 bar ü
Operating temperature:	max. 70°C
Ambient temperature:	+1°C...+50°C

SIZING

Operating pressure (bar g)	2	3	4	5	6	7	8	9	10	11	12	13	14
Correcion factor fp	0,49	0,66	0,77	0,86	0,93	1,00	1,05	1,10	1,14	1,18	1,21	1,24	1,27

Compressed air inlet temperature (°C)	≤ 25	30	35	40	45	50	55	60	65	70
Correcion factor fte	1,20	1,12	1,00	0,83	0,69	0,59	0,50	0,44	0,39	0,37

Temperature of cooling air or cooling water (°C)	≤ 25	30	35	40	45	50
Correction factor ftu	1,00	0,96	0,90	0,82	0,72	0,60

Pressure dewpoint (°C)	3	5	7	10
Correction factor ftpd	1,00	1,09	1,19	1,37

Example:

$\dot{V}_{nom}$ = 600 m³/h (intake volume flow of the compressor), compressed air inlet temperature = 40°C, cooling water temperature = 35°C, operating pressure = 9 bar, pressure dewpoint = +3°C

$$\dot{V}_{korr} = \frac{\dot{V}_{nom}}{f} = \frac{600\ m^3/h}{1{,}06 \times 0{,}83 \times 0{,}90 \times 1{,}00} = 758\ m^3/h$$

Calculated dryer size:
DC 0850

Donaldson® Ultrafilter

DIMENSIONS

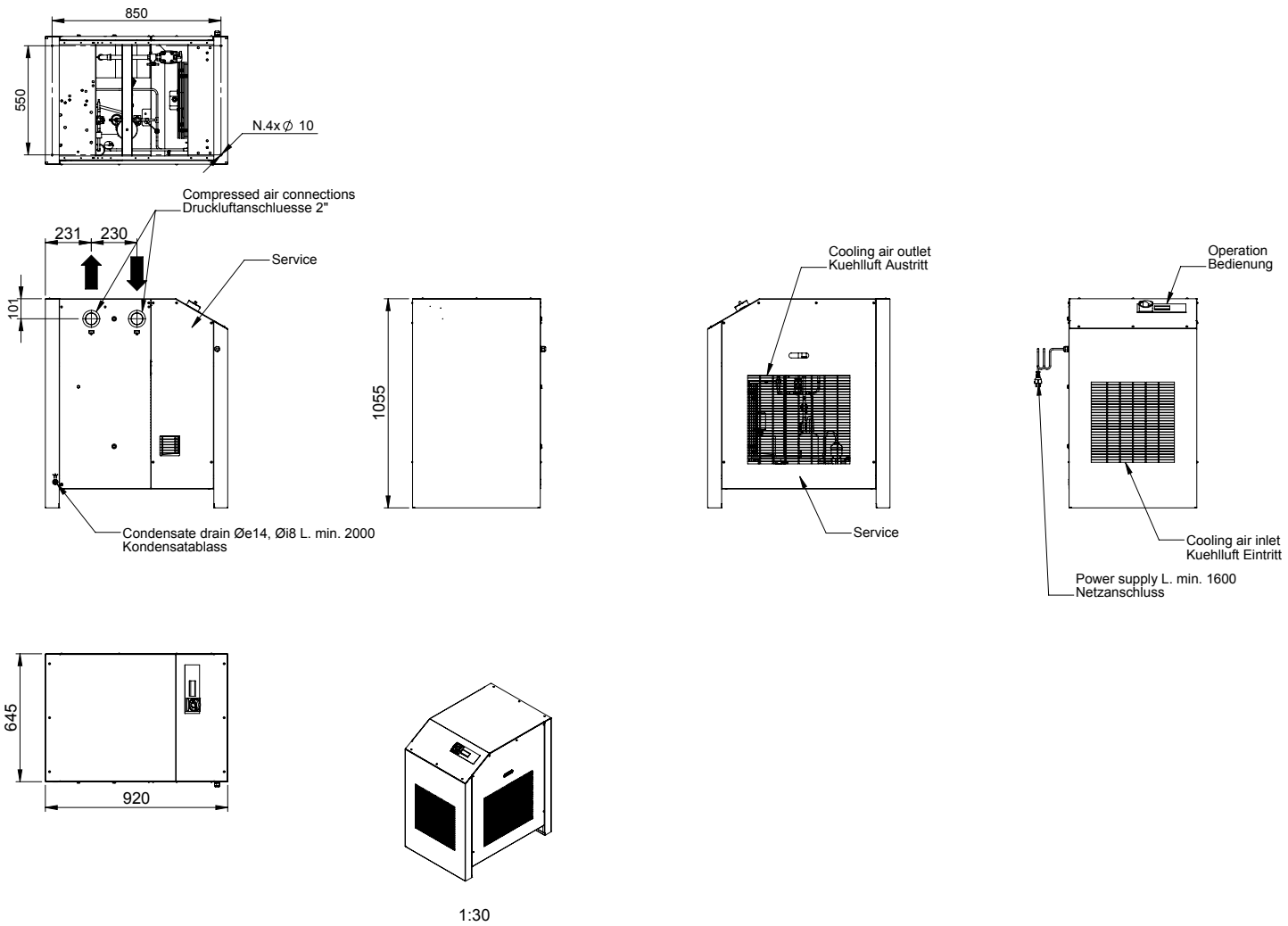

Type	Weight kg	Air Connections BSP-F	Condensate Connections Ømm external / Ømm internal
DC 0550 AES	92	G 2"	14 / 8
DC 0650 AES	94	G 2"	14 / 8

DIMENSIONS

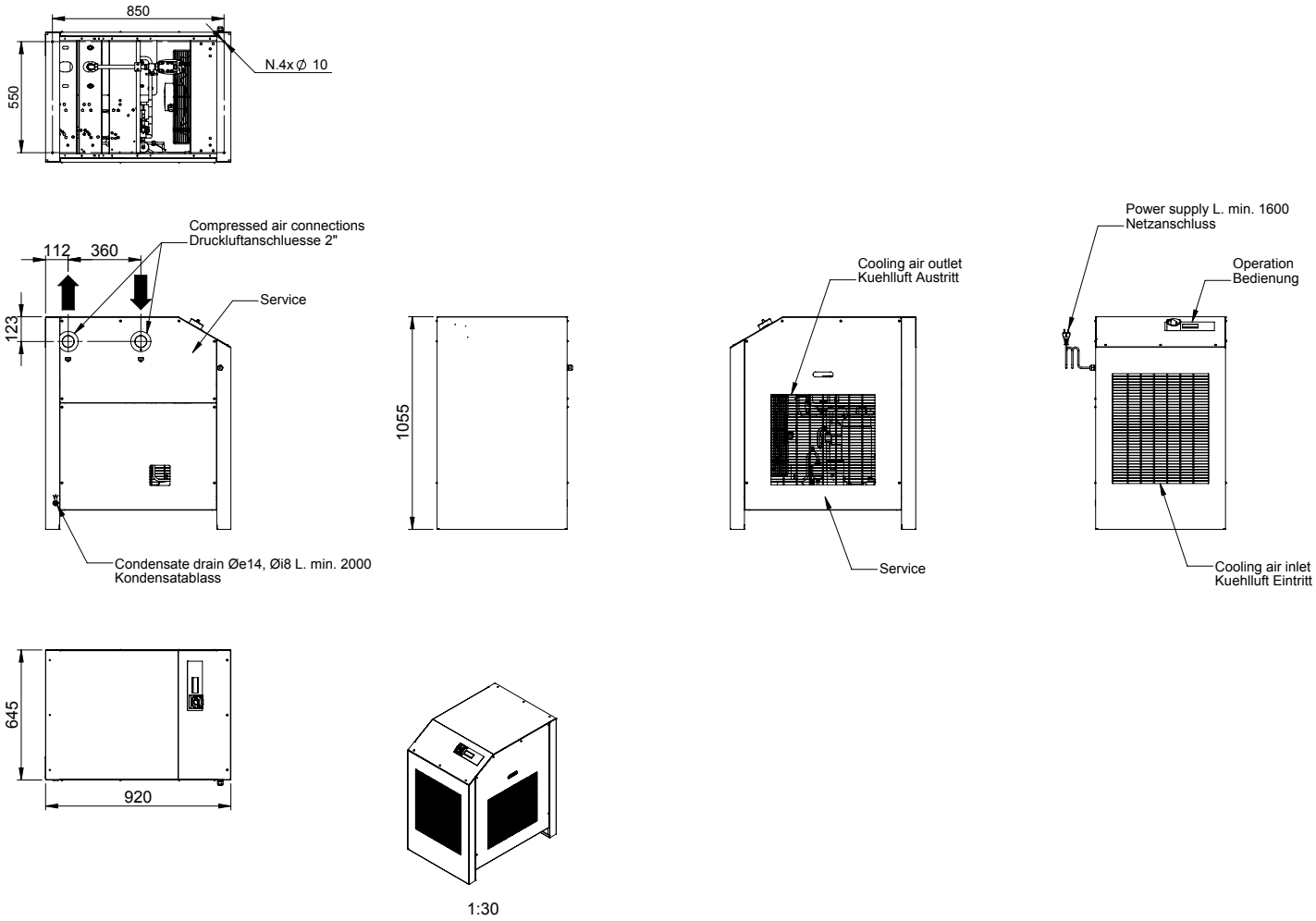

Type	Weight kg	Air Connections BSP-F	Condensate Connections Ømm external / Ømm internal
DC 0750 AES	141	G 2"	14 / 8
DC 0850 AES	150	G 2"	14 / 8
DC 1000 AES	161	G 2"	14 / 8

DIMENSIONS

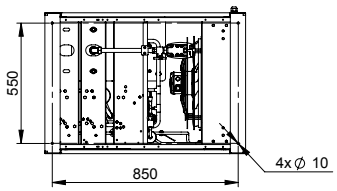

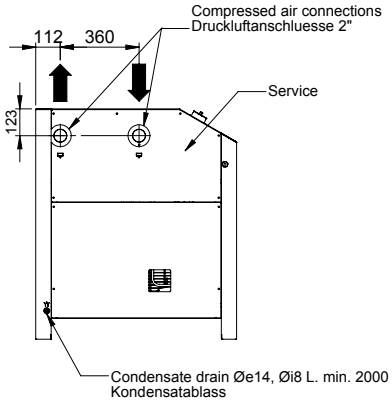

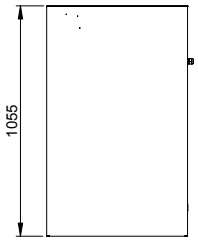

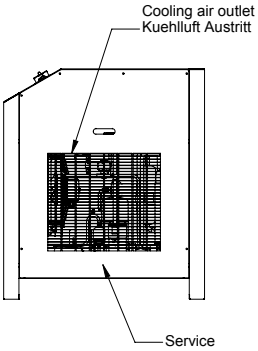

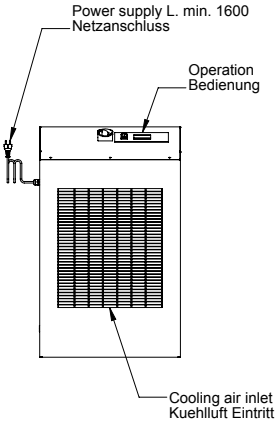

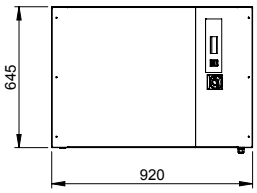

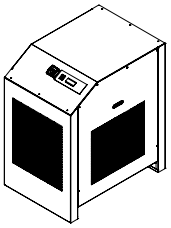

1:30

Type	Weight kg	Air Connections BSP-F	Condensate Connections Ømm external / Ømm internal
DC 1175 AES	169	G 2"	14 / 8

DIMENSIONS

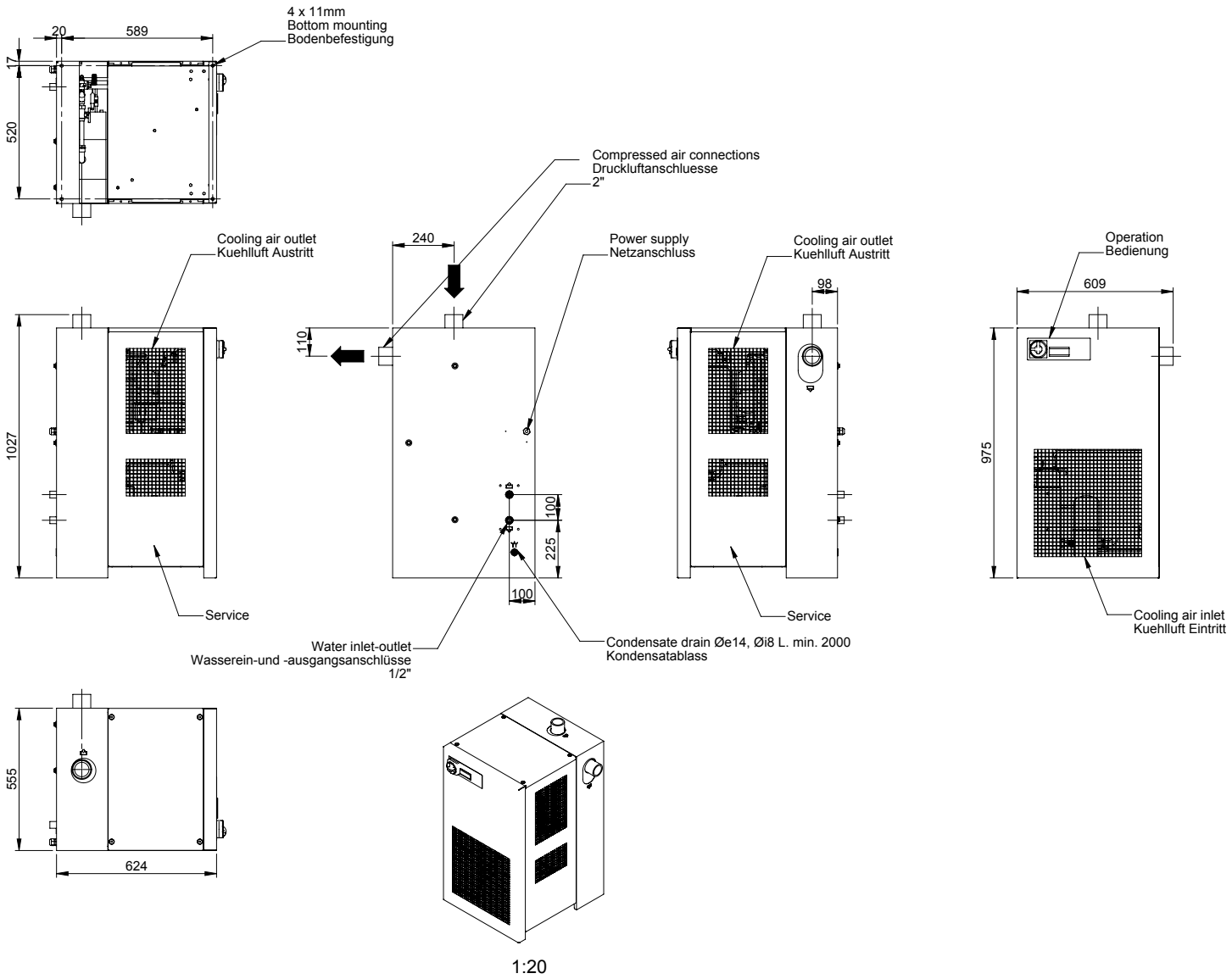

Type	Weight kg	Water Connections BSP-F	Condensate Connections Ømm external / Ømm internal
DC 0550 WB	91	G 1/2"	14 / 8
DC 0650 WB	91	G 1/2"	14 / 8

Donaldson® Ultrafilter

DIMENSIONS

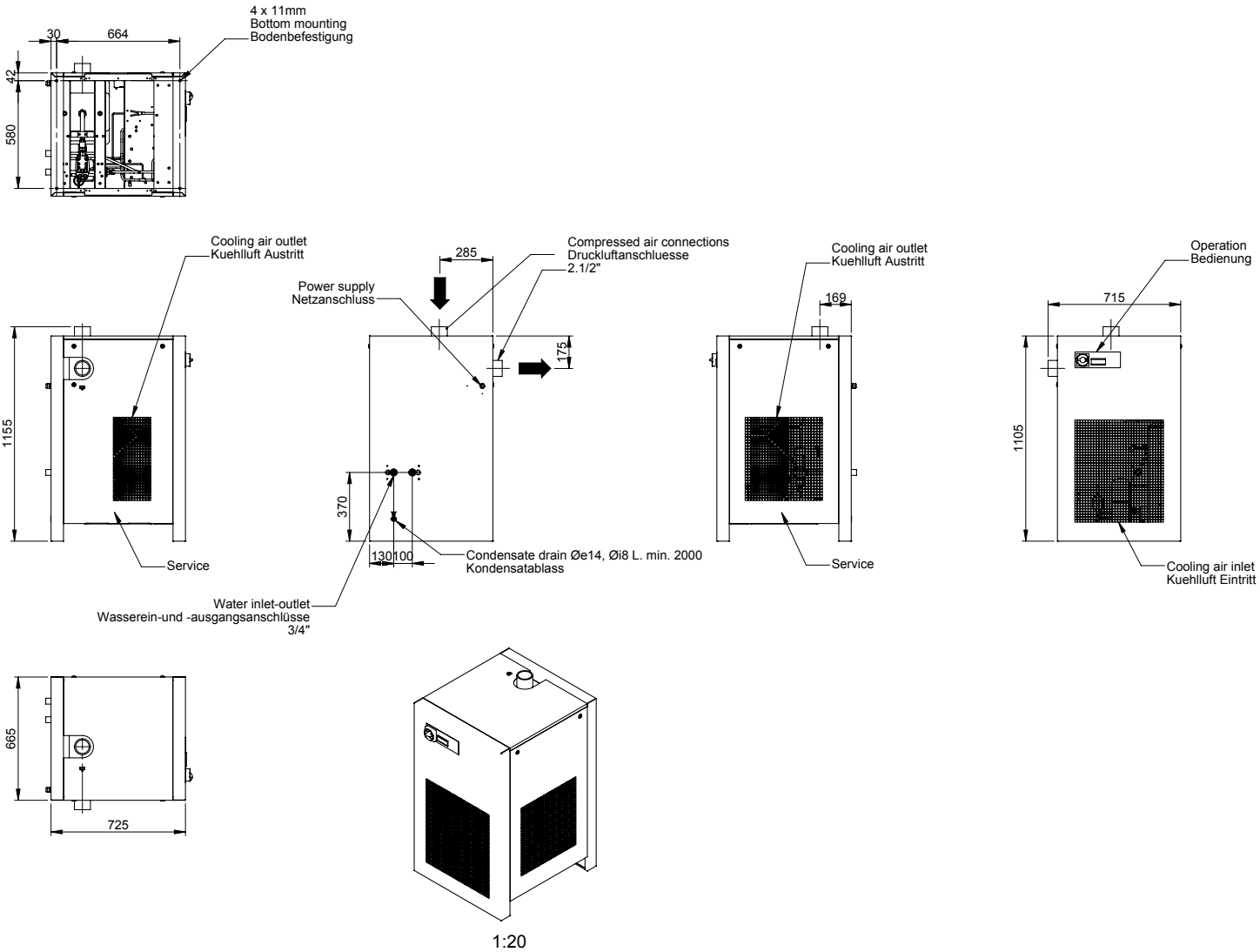

Type	Weight kg	Water Connections BSP-F	Condensate Connections Ømm external / Ømm internal
DC 0750 WB	138	G 3/4“	14 / 8
DC 0850 WB	147	G 3/4“	14 / 8
DC 1000 WB	158	G 3/4“	14 / 8

DIMENSIONS

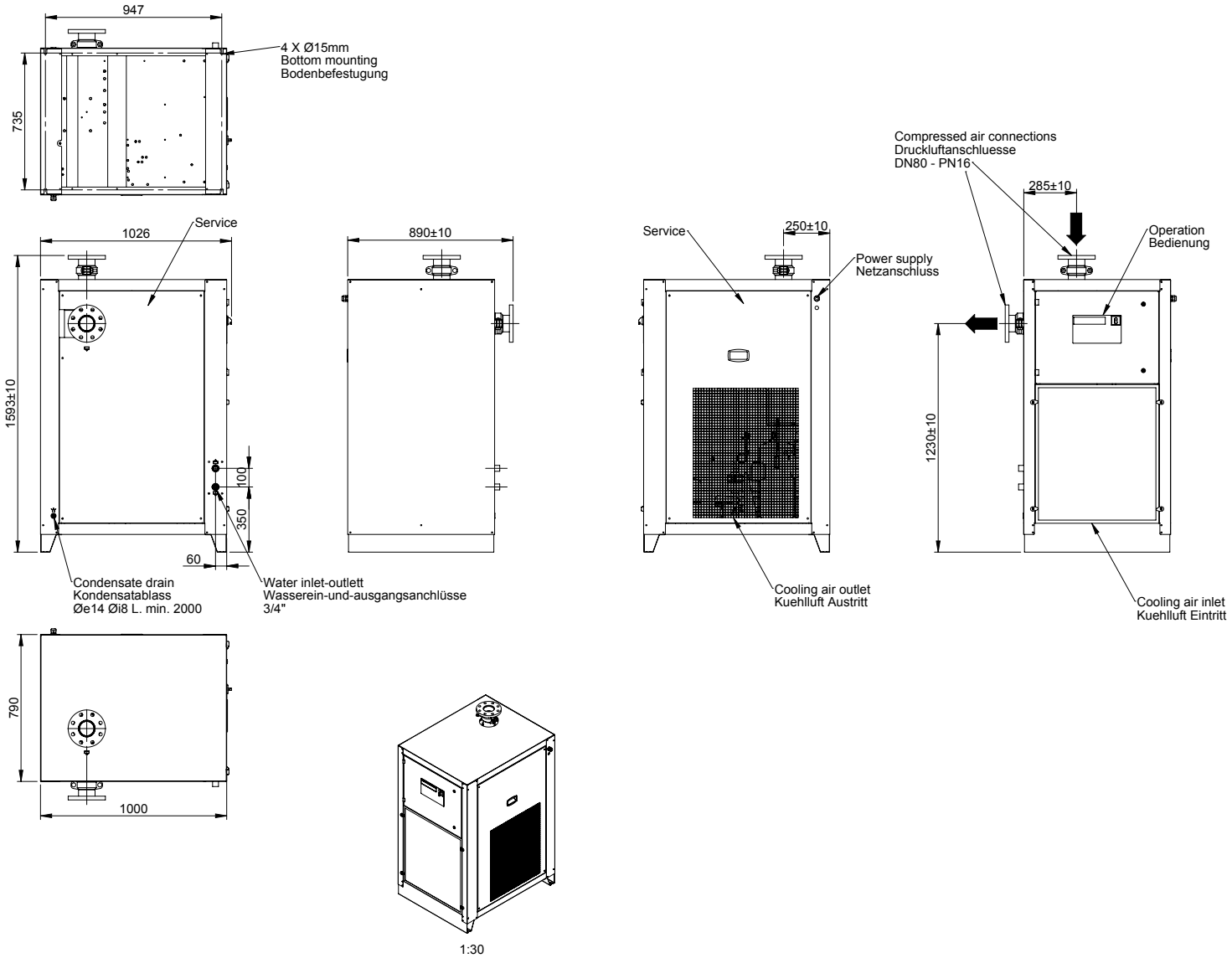

Type	Weight kg	Water Connections BSP-F	Condensate Connections Ømm external / Ømm internal
DC 1175 WB	227	G 3/4“	14 / 8

Donaldson® Ultrafilter