Donaldson
FILTRATION SOLUTIONS

BURAN
REFRIGERATION COMPRESSED AIR DRYER

UltraPleat™ Technology

Plug & Play Design

Why is Compressed Air processed?

Compressed air is an indispensable source of operating and processing power in all areas of industrial and technical production. The compressed air is generated by raising the pressure of large volumes of ambient air. Usually this air contains harmful substances, such as dirt particles and moisture in the form of water vapour. The water vapour condenses and can lead to operational breakdowns and considerable but avoidable costs. To prevent production downtimes compressed air must be clean, dry and oil-free.

Buran Refrigeration Compressed Air Dryers

The refrigeration compressed air dryers of the Buran range, dry the air to prevent condensation and corrosion damage. The dryers in a robust metal housing are equipped with an integrated pre- and post filter inclusive electronic level controlled condensate drain and a dewpoint indicator. The aluminium heat exchanger includes three functions in one: air-to-air heat exchanger, refrigerant-to-air heat exchanger and electronic level controlled condensate drain. Hereby an especially compact design is achieved.

How the Buran functions

The compressed air is being fed into the dryer and being pre-cooled in the air-to-air heat exchanger by the outgoing cold compressed air. The pre-cooled air then passes through the refrigerant-to-air heat exchanger where it is being further cooled down to the required pressure dewpoint. The moisture in the compressed air condenses out and gathers and discharges automatically. Finally, the cold discharged air is being reheated by the incoming compressed air. This saves energy and prevents any moisture forming beyond the dryer in the compressed air system. The cooling capacity of the refrigeration cycle is being controlled by a hot gas bypass, which will assure secure functioning even during partial loading.

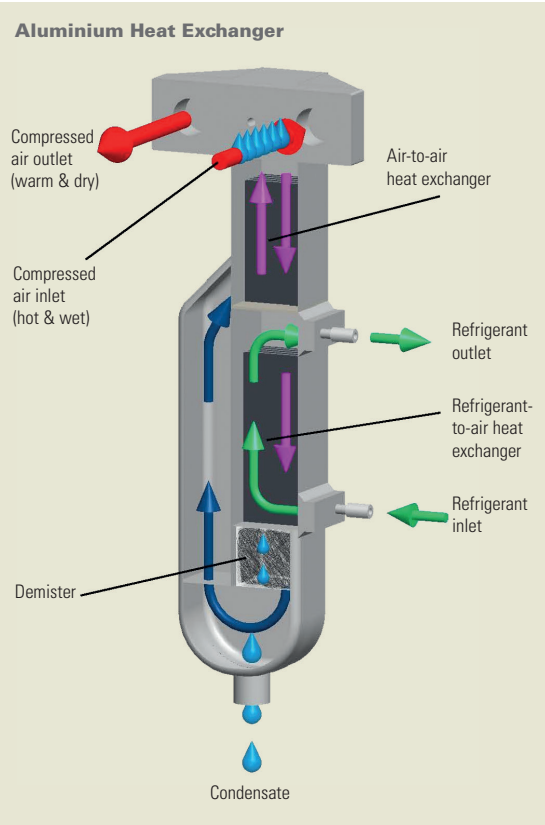

The main feature of the Buran refrigeration compressed air dryer is the aluminium heat exchanger

Low Pressure Losses

Efficient and Economical

The efficiency of the outmost compact and space saving design is shown by the significant reduction of the differential pressure. Only a 400 mbar lower differential pressure with regard to 8,000 operating hours at a flow rate of 850 m³/h will already save 5,175 Euro per year (7 bar mains pressure, 90 kW of installed capacity, 18 Eurocent/kWh). This example shows that an investment into the optimization of the compressed air system amortises itself within a short time.

The display shows all relevant information

Energy Cost Savings through Reduction of Differential Pressure

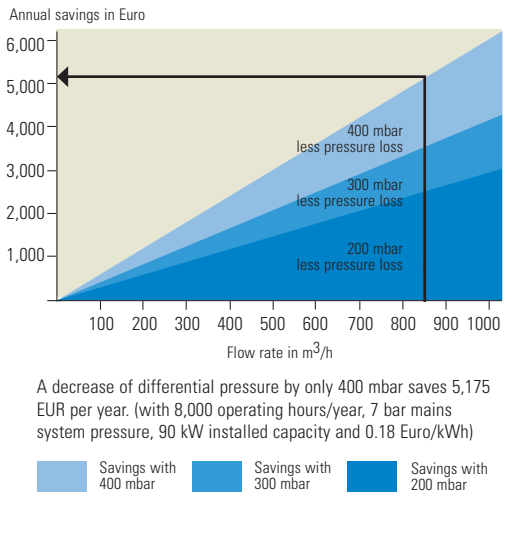

Easy Handling

The robust Buran refrigeration compressed air dryers stand out due to the easy handling and ease of maintenance:

- Space saving design, easy installation. No additional pipe installation of pre- and post-filter required.*
- All connections are accessible from one side (compressed air in- and outlet, electrical connection, condensate drain and inspection drain control)
- Good accessibility of the main components
- Reduced maintenance effort

*(Buran AB series)

Clear, easily visible Control Display

The user-friendly control panel allows for the monitoring of the operating status at a glance:

- The dewpoint is clearly displayed with a 10 point LED indicator
- Easy LED-Display for the operating mode, an alarm and the function of the fan
- Adjustable dewpoint alarm
- Service display informs automatically about the forthcoming filter replacement

An easy installation is guaranteed with all connections being located on one side

Technical Data

Buran AB series with integrated pre- and post-filters

Type	Volume flow		Differencial pressure	Power supply	Power consumption	Cooling air requirement	Air connection	Weight	Dimensions mm		
	m^3/h	m^3/min	bar	V/Ph/Hz	kW (50 Hz)	m^3/h	BSP	kg	W	H	D
DC 0020 AB	20	0,33	0,04	230/1~/50-60	0,14	200	G ¾“	30	455	645	410
DC 0035 AB	35	0,58	0,04	230/1~/50-60	0,17	200	G ¾“	31	455	645	410
DC 0050 AB	50	0,83	0,10	230/1~/50-60	0,19	300	G ¾“	33	455	645	410
DC 0065 AB	65	1,08	0,13	230/1~/50-60	0,24	300	G ¾“	36	455	645	410
DC 0085 AB	85	1,42	0,14	230/1~/50-60	0,28	300	G ¾“	37	455	645	410
DC 0105 AB	105	1,75	0,28	230/1~/50-60	0,28	300	G ¾“	37	455	645	410
DC 0125 AB	125	2,08	0,39	230/1~/50	0,45	300	G ¾“	38	455	645	410
DC 0150 AB	150	2,50	0,15	230/1~/50	0,47	300	G 1 ½“	63	600	870	590
DC 0180 AB	180	3,00	0,12	230/1~/50	0,68	380	G 1 ½“	65	600	870	590
DC 0225 AB	225	3,75	0,18	230/1~/50	0,76	380	G 1 ½“	76	600	870	590
DC 0300 AB	300	5,00	0,36	230/1~/50	0,71	450	G 1 ½“	76	600	870	590
DC 0360 AB	360	6,00	0,49	230/1~/50	0,89	450	G 1 ½“	76	600	870	590
DC 0450 AB	450	7,50	0,11	230/1~/50	0,91	450	G 2“	143	800	1055	920
DC 0550 AB	550	9,17	0,15	230/1~/50	1,11	1900	G 2“	152	800	1055	920
DC 0650 AB	650	10,83	0,32	230/1~/50	1,40	1900	G 2“	159	800	1055	920
DC 0750 AB	750	12,50	0,25	230/1~/50	1,34	2200	G 2“	175	800	1055	920
DC 0850 AB	850	14,17	0,33	230/1~/50	1,70	3300	G 2“	192	800	1055	920
Buran AES series with energy-saving mode, without integrated filers											
DC 0550 AES*	550	9,17	0,16	230/1~/50	1,11	1900	G 2“	122	645	1055	920
DC 0650 AES*	650	10,83	0,23	230/1~/50	1,40	1900	G 2“	123	645	1055	920
DC 0750 AES*	750	12,50	0,08	230/1~/50	1,34	2500	G 2“	150	645	1055	920
DC 0850 AES*	850	14,17	0,10	230/1~/50	1,70	3300	G 2“	160	645	1055	920
DC 1000 AES*	1000	16,67	0,13	230/1~/50	1,85	3300	G 2“	170	645	1055	920
DC 1175 AES*	1175	19,58	0,18	400/3~/50	2,33	3300	G 2“	180	645	1055	920

*also available in water cooled version (without energy-saving mode, without integrated filters). Dimensions & connections differ from AES-Version.

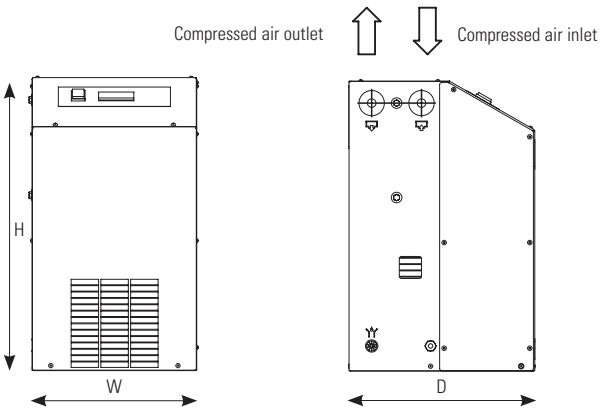

Buran DC 0020 AB - DC 0850 AB

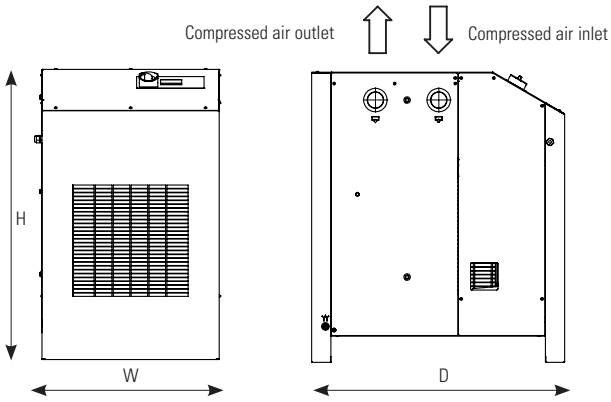

Buran DC 0550 AES - DC 1175 AES

Volume flow referred to the suction status of the air compressor (+20 °C, 1 bar), with compressed air inlet temperature 35 °C, operating overpressure 7 bar(g) , ambient temperature 25 °C, pressure dewpoint +3 °C, measured at dryer outlet in accordance with ISO 7183, power consumption at ambient temperature +25 °C, permitted inlet temperature: max. 70 °C, Permitted ambient temperature: min. +2 °C – max. 50 °C, max. operating pressure: DC 0020 AB to DC 0085 AB 16 bar; DC 0105 AB to DC 0850 AB and DC 0550 AES to DC 1175 AES 14 bar, higher pressure on request. Protection class IP 22, water cooled versions deviant. Noise level: dB(A) <70.

Working overpressure	bar (g)	2	3	4	5	6	7	8	9	10	11	12	13	14	15	16
Factor	f_p	0.49	0.66	0.77	0.86	0.93	1.00	1.05	1.10	1.14	1.18	1.21	1.24	1.27	1.30	1.33

Pressure Dewpoint	°C	3	5	7	10
Factor	f_{tpd}	1.00	1.09	1.19	1.37

Temperature of ambient air, only for air-cooled dryers	°C	25	30	35	40	45	50
Factor	f_{tu}	1,00	0,96	0,90	0,82	0,72	0,60

Compressed air inlet temperature	°C	25	30	35	40	45	50	55	60	65	70
Factor	f_{te}	1,20	1,12	1,00	0,83	0,69	0,59	0,50	0,44	0,39	0,37

Corrected dryer capacity =
Standard dryer capacity x f_p x f_{tpd} x f_{tu} x f_{te}

Benefits of the new Buran range

Features and Benefits

Integrated pre- and post-filter (BURAN AB series)

- Pre-filter type V protects the air heat exchanger from oil and particle contamination
- Post-filter UltraPleat M meets specified compressed air quality requirements
- High separation efficiency of filter at low pressure drop
- No additional installation effort for pre- and post-filter required

High Overload Capacity

- In case of overload, the dryer will only switch off at a dewpoint above approx. +20 °C

Integrated Alarm Signal

- Economical operation and safe system installation in the compressed air network.
- Connection to higher-level control possible

Electronic level controlled Condensate Drain

- No compressed air losses due to condensate removal

Compact & user-friendly

- Compact plug & play design
- Achievable compressed air quality according to ISO 8573-1:2010 [2:4:2] (with usual inpurity of compressed air)
- Energy savings through low differential pressure
- Easy to service concept (service kits, service display, easy access to components within the housing)

Aluminium Heat Exchanger

- Low operating costs due to marginal compressed air losses
- No corrosion inside the heat exchanger due to contact with wet compressed air

Hotgas Bypass Control (BURAN AB series)

- Proven and reliable technology with easy handling
- Constant dewpoint even with changing loads

Energy-saving control (BURAN AES series)

- Dewpoint controlled switch

Increase of the Compressed Air Quality with Filtration

With a pre- and post filter the quality of the compressed air is further increased.
The filter protects the dryer by separating liquid water, particles and oil.
The post-filter meets the specified compressed air quality according to ISO 8573-1:2010 which is required for the application.

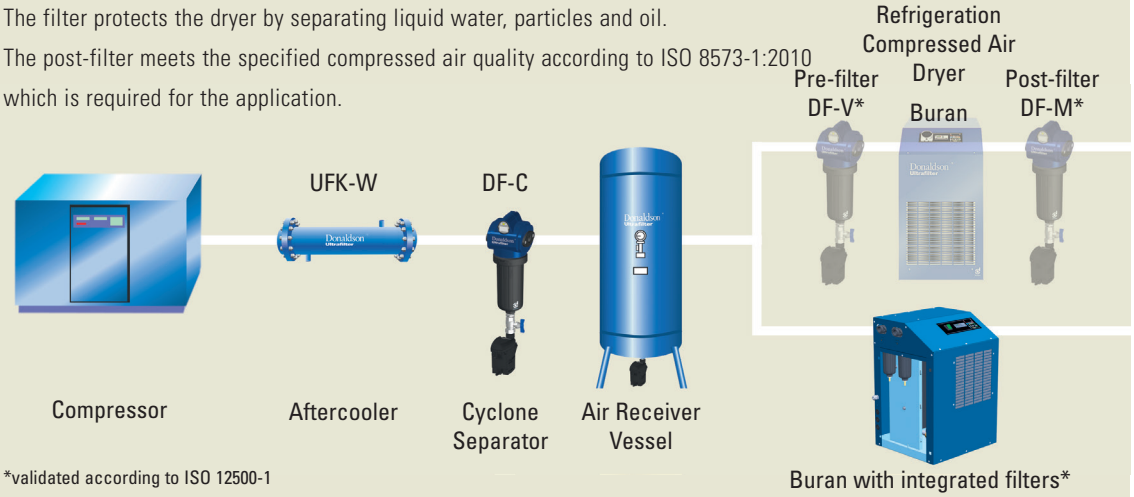

*validated according to ISO 12500-1

Everything from one Source

Service with highest Expectations

Our service is always nearby! With our technical service and support network throughout Europe, we can routinely service your production systems as well as provide on-site support whenever needed.

With one of our service centers you receive quick, cost-effective and competent services for all filtration applications from one source.

The Solution for high Volume Flows

Donaldson offers a comprehensive range of refrigeration compressed air dryers to meet your specific needs. For high volume flows our engineering team developed an individual solution, which is tailored to your operating parameters and fulfils highest requirements with regard to energy efficiency.

In addition to our Buran refrigeration compressed air dryers, the Boreas (1,260 to 21,000 m³/h) and Brisa (10,500 to 50,000 m³/h) range are available for this purpose.

Donaldson.
FILTRATION SOLUTIONS

Compressed Air Filtration · Filters for Sterile Air, Steam and Liquids · Refrigerant Drying · Adsorption Drying · Condensate Drains · Condensate Purification Systems · Process Air and Gas Processing

Total Filtration Management

Donaldson offers a wide variety of solutions to reduce your energy costs, improve your productivity, guarantee production quality and help protect the environment..

Total Filtration Service

A comprehensive range of services especially designed to keep your production at peak performance and at the lowest total cost of ownership.

Please contact us:
Donaldson Europe B.V.
Research Park Building No. 1303 · Interleuvenlaan 1
B-3001 Leuven · Belgium
Phone +32(0)16 38 38 11 · Fax +32(0)16 40 00 77
CAP-europe@donaldson.com · www.donaldson.com

F117082 ENG – 2025/04

Technical alterations reserved (6/2018)