Dryer Systems

Heatless Regenerating Purification Packages

Oilfreepac® OFP 1350 - 8750

MAIN FEATURES & BENEFITS

- Complete purification package with triple prefiltration and level controlled electronic condensate drains
- Heatless adsorption dryer, activated carbon adsorber for removal of oil vapors and hydrocarbons, afterfilter and shut-off device against oil breakthrough
- Easy servicable butterfly valves
- Comprehensive option package:
  Dewpoint depending control, start-up device, bypass, pneumatics control, free of silicone and extractable components, etc.
- 11 sizes available, matched to the compressor flows

OFP
1350 - 8750

INDUSTRIES

- Chemical and electrical industry

- Machine building industry and plant engineering / construction

- Automotive industry

- PCB assembly and CD manufacturing

Donaldson Filtration Deutschland GmbH
Büssingstr. 1
D-42781 Haan
Tel.: +49 (0) 2129 569 0
Fax: +49 (0) 2129 569 100
E-Mail: CAP-de@donaldson.com
Web: www.donaldson.com

Donaldson® Ultrafilter

F119023_06_2018_ENG

Technical alterations reserved (6/2018)

PRODUCT DESCRIPTION

Compressed air is flowing through the inlet of the system (J) into a three stage prefiltration PE, M, S (4, 5, and 6). In these stages, the air is cleaned from particles and condensate down to a residual content of 0.01 mg/m³. The condensate is removed by condensate drains (14). Via a butterfly valve (9) the air is lead into the adsorption vessel (1) for drying, in which the air is dried down to the required pressure dewpoint. After that, the air is lead through a non-return valve (11) and into an activated carbon tower (2), in which oil vapor and hydrocarbons are retained. Via an after filter (7), in which possible abrasion from activated carbon is retained, the clean and oilfree air is lead into the compressed air network to the application.

While one vessel is in the drying phase (adsorption), the other vessel is being dried again (regeneration).

A partial stream of dried air is expanded to atmospheric pressure via a nozzle (12), lead accross the desiccant bed for regeneration and discharged to the atmosphere via a butterfly valve (8). As a safety feature against contamination (e.g. oil breakthrough of the compressor), the differential pressure across the PE elements is monitored. In case of an immediate increase in differential pressure, the differential pressure gauge triggers the control and a butter fly valve (9) is closed.

Typical applications for the purification packages OFP are:

- **Central air treatment**
  Production of dry, oil-free and particulate- free compressed air

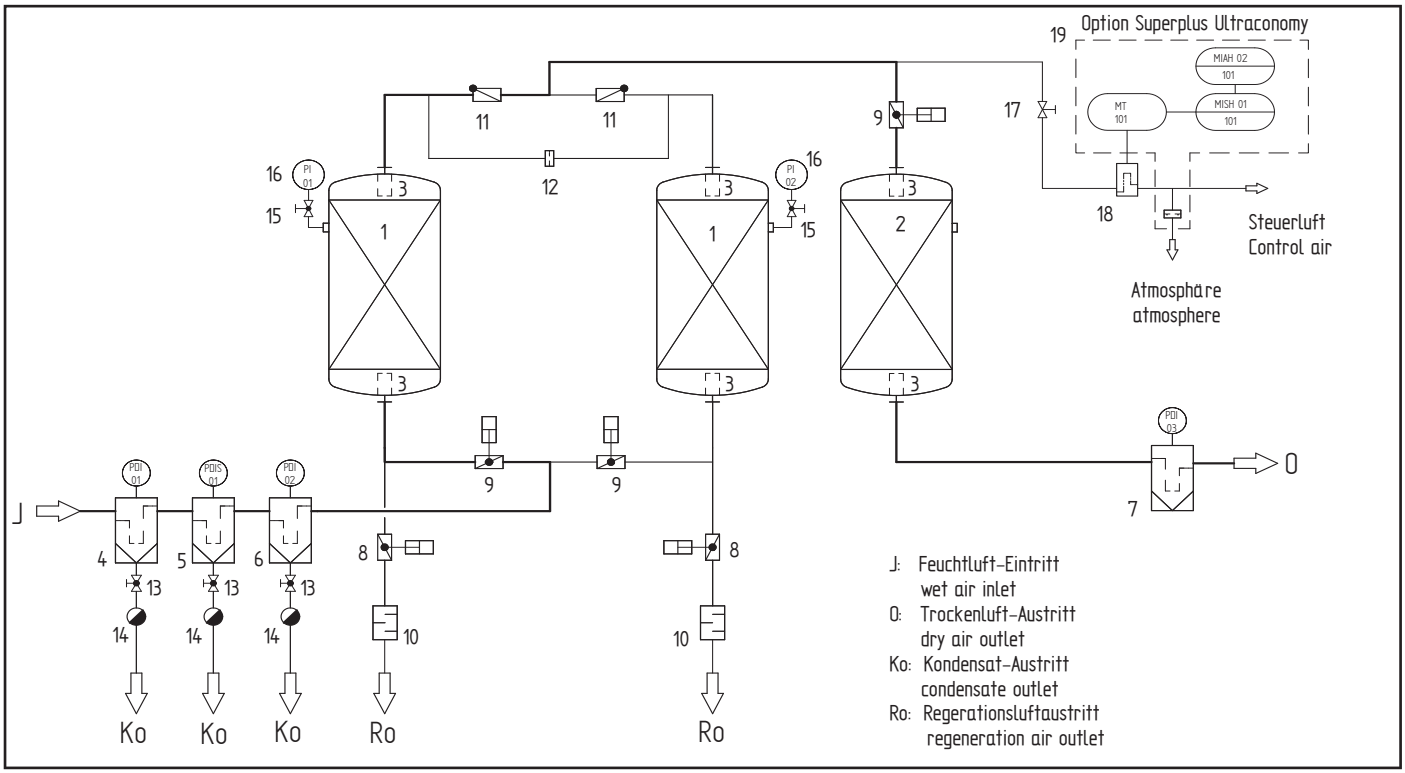

PRODUCT SPECIFICATIONS

Features:	Benefits:
Purification package designed for use with oil lubricated compressors	No need to buy expensive and less energy efficient „oilfree“ compressors
Compressed air quality better than in any „oilfree“ compressor	Use in highly sensitive production possible (food-, beverage-, electronic industry, etc.)
Purification package complete with pre- and afterfilter	Turnkey system, no additional installation required, all components from one hand, technically perfectly matched to each other
Prefilter with electronic, level controlled condensate drain incl. function control and alarm message	No compressed air losses due to condensate removal, therefore reduction of operating cost
Easy servicable butterfly valves	Short service downtime
Generous dimensioned filters and vessel diameters	Large filtration surface, therefore low flow speed, pressure drop and low operating costs
Safety feature against oil breakthrough, consisting of differential pressure measurement and shut-off valve	High operating safety in combination with use of oil lubricated compressors
Intermittent operation standard	Link between dryer and compressor possible on central applications, therefore saving of compressed air
11 sizes available, matched to the compressor flows	Custom made solutions possible, matching exactly customer’s requirements; no oversizing of compressors neccessary, due to lowest possible regeneration air requirements
Superplus Version including dewpoint dependent capacity control and text display	Saving of energy and operational cost due to adaption of the purge air consumption to the actual operating conditions. Indication of current dewpoint and function status as well as alarm and service messages on LCD text display in clear text ensures high operating safety of the adsorption dryer.

Technical Data:	
Operating pressure:	min. 4 bar (g) / max. 10 bar (g)
Ambient temperature:	min. +4°C / max. +50°C
Medium temperature:	max. +50°C
Medium:	Compressed air / nitrogen
Power supply:	230 V or 110 V AC / 50-60 Hz or 24 V DC
Power consumption:	approx. 40 W
Declaration of Conformity:	
Types 1350 - 8750:	acc. to PED 2014/68/EU
Pressure vessel – design, manufacture, testing	
Adsorber:	acc. to PED 2014/68/EU
Filter:	acc. to PED 2014/68/EU

PRODUCT SPECIFICATIONS

OFP	Volume flow m^3/h (1 bar, 20°C)*	Reg. air losses average m^3/h (1 bar, 20°C)	Volume flow out (min.) m^3/h (1 bar, 20°C)	Pressure drop new mbar	Prefilter (afterfilter) PE, M, S (PE)
1350	1350	270	1097	340	30/30
1650	1650	330	1341	390	30/30
1950	1950	390	1584	290	30/50
2250	2250	450	1828	330	30/50
2750	2750	550	2234	420	30/50
3500	3500	700	2844	450	3-20/30
4000	4000	800	3250	250	4-30/30
5000	5000	1000	4063	310	4-30/30
6000	6000	1200	4875	370	4-30/30
7000	7000	1400	5688	440	4-30/30
8750	8750	1750	7109	280	8-30/30

* related to 1 bar (abs) and 20 °C at intake of compressor and 7 bar (g) and 35 °C inlet temperature

SIZING

Operating pressure bar (g)	4	5	6	7	8	9	10
Correction factor overpressure (fp)	0,62	0,75	0,88	1,0	1,12	1,25	1,38

Inlet temperature °C	20	25	30	35	40	45	50
Correction factor temperature (f_T)	1,0	1,0	1,0	1,0	0,8	0,7	0,5

Example:

$\dot{V}_{nom}$ = 2000 m³/h, Inlet temperature = 30°C, operating pressure = 10 bar (g), PDP = -40°C

$$\dot{V}_{korr} = \frac{\dot{V}_{nom}}{f} = \frac{2000\ m^3/h}{1{,}38 * 1{,}0} = 1449\ m^3/h$$

Calculated dryer size:
OFP, type 1650

DIMENSIONS

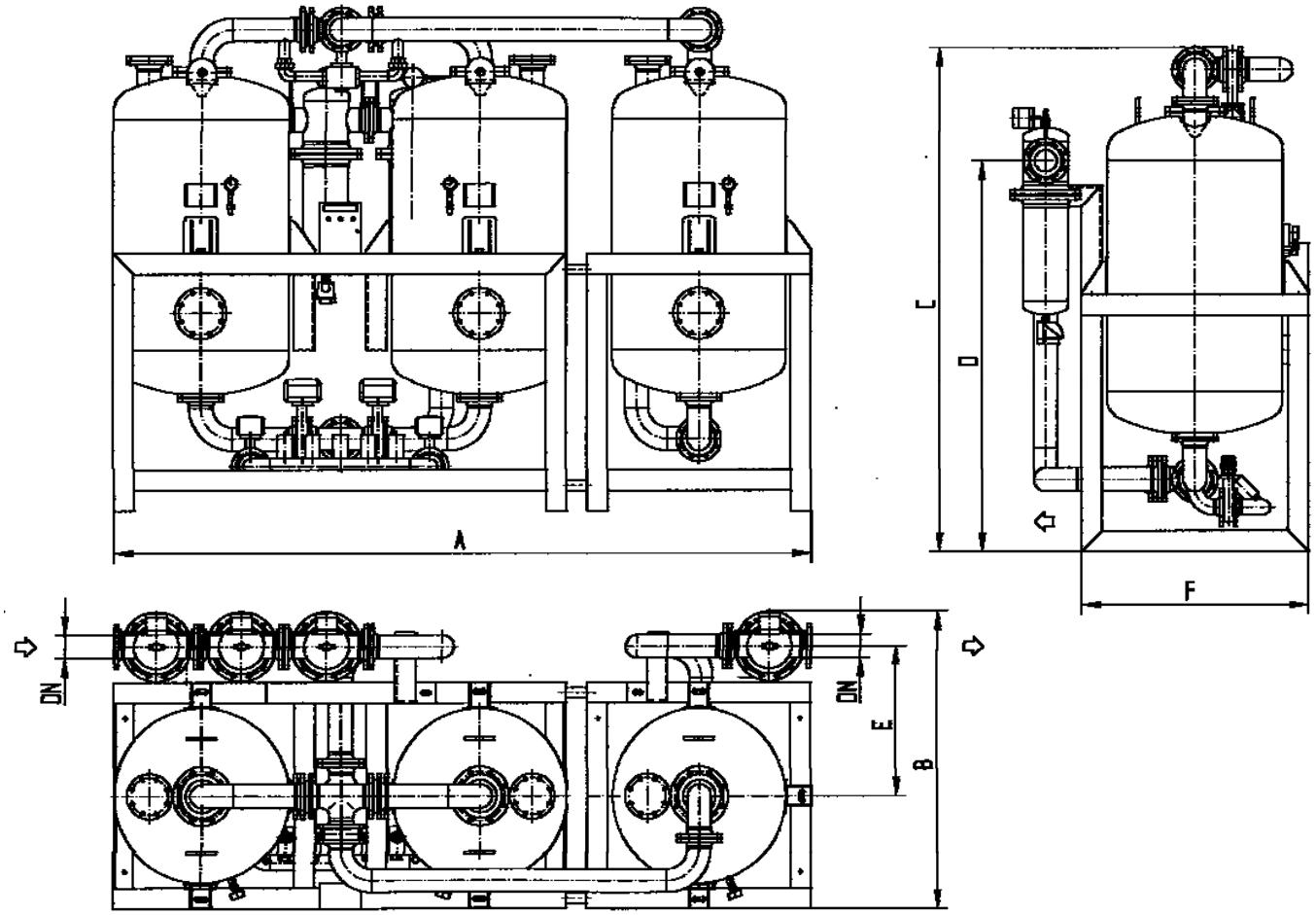

Type	DN "	A mm	B mm	C mm	D mm	E mm	F mm
1350	80	2250	950	2555	1800	475	700
1650	80	2550	1050	2365	1800	525	800
1950	100	2700	1190	2485	1900	595	850
2250	100	2900	1290	2605	1900	645	950
2750	100	3050	1340	2695	1900	670	1000
3500	100	3400	1490	2695	1900	745	1150
4000	150	3650	1600	2980	2250	825	1200
5000	150	3950	1680	3040	2250	860	1300
6000	150	4250	1780	3080	2250	910	1400
7000	150	4550	1880	3095	2250	960	1500
8750	200	5150	2290	3320	2300	1150	1700