Boreas
DV 1260 - DV 21000 AB / WB
Air cooled / water cooled Refrigeration Dryers

MAIN FEATURES & BENEFITS

- Refrigeration compressed air dryer for safe and economical compressed air drying
- 17 sizes for nominal flow rates of 1.260 to 21.000 m³/h allow an accurate selection of the appropriate refrigeration compressed air dryer to the respective operating volume flow
- Hot gas bypass control in conjunction with pressure and temperature monitoring for safe operation and constant pressure dew point under different load conditions
- Electronic level-controlled condensate drain on the heat exchanger ensure reliable condensate drainage depending on the amount of condensate without loss of compressed air. Includes function monitoring and alarm message
- The electronic control including display shows the current pressure dewpoint, operating hours as well as service and alarm messages and offers numerous possibilities for individual adjustment
- Compact und space-saving design with robust steel housing
- Compression of the refrigerant at high running, low vibration and low noise operation

PRODUCT DESCRIPTION

Boreas DV 1260 - DV 21000 AB / WB

For the energy-conscious user, the new Boreas DV refrigerators are now available. These compressed air dryers are designed for operating pressures up to 14 bar and thus cover a wide range of applications in various industries. The dew point is controlled by a hot gas bypass, which ensures a constant dew point even under different load conditions.

The electronic control system in conjunction with pressure and temperature sensors continuously monitors the operating conditions in the cooling circuit and indicates any alarm conditions on the control display or activates the potential-free alarm contact. Both the air cooled and the water cooled version are equipped with an electronic-level-controlled condensate drain on the heat exchanger, which ensures a safe condensate drainage depending on the amount of condensate, without loss of compressed air.

Controller Display

INDUSTRIES

- Chemical and electrical industry

- Maschine building industry and plant engineering/ construction

- Automotive industry

Donaldson Filtration Deutschland GmbH
Büssingstraße 1
D-42781 Haan • Germany
Tel. +49 2129 569 0
Fax +49 2129 569 100
CAP-de@donaldson.com
www.donaldson.com

EN - 2017/4

Technical alterations reserved (04/2018)

PRODUCT DESCRIPTION

Function Description (air cooled version)

The warm, moisture-laden compressed air enters the air/air heat exchanger (**1a**) and is precooled there by the incoming compressed air. The compressed air then flows into the air/refrigerant heat exchanger (**1b**). There, it is cooled to approx. 2°C, whereby water vapor is condensed and the liquid water is separated in the water separator (**1c**) and is discharged from the system via the electronically-controlled condensate drain (**21**). The cool, saturated compressed air then flows back through the air-to-air heat exchanger (**1a**) and is heated by the incoming compressed air and thus is under-saturated.

The pressure dewpoint achieved depends on the design and operating conditions and is + 3°C at nominal operating conditions.

In the refrigeration circuit, the refrigerant is compressed in the refrigerant compressor (**6**) and then liquefied with the fan (**9**) in the condenser (**8**). The liquid refrigerant is expanded via a capillary tube (**11**) and injected into the air/refrigerant heat exchanger (**1b**). The warm compressed air evaporates the refrigerant and the pressure is reduced and cooled by this phase change, which also cools the compressed air. The expanded and gaseous refrigerant is returned to the compressor.

During those periods when the compressed air load is reduced the excess refrigerant is by-passed automatically back to the compressor via the hot gas by-pass valve (**7**).

Main Components

- Air/air (**1a**) and air/refrigerant heat exchanger (**1b**) with integrated water separator (**1c**)
- Electronic level-controlled condensate drain (**21**)
- Refrigerant compressor (**6**)
- Capillary tube (**11**)
- Refrigerant condenser (**8**) with fan (**9**)
- Hot gas bypass valve (**7**)

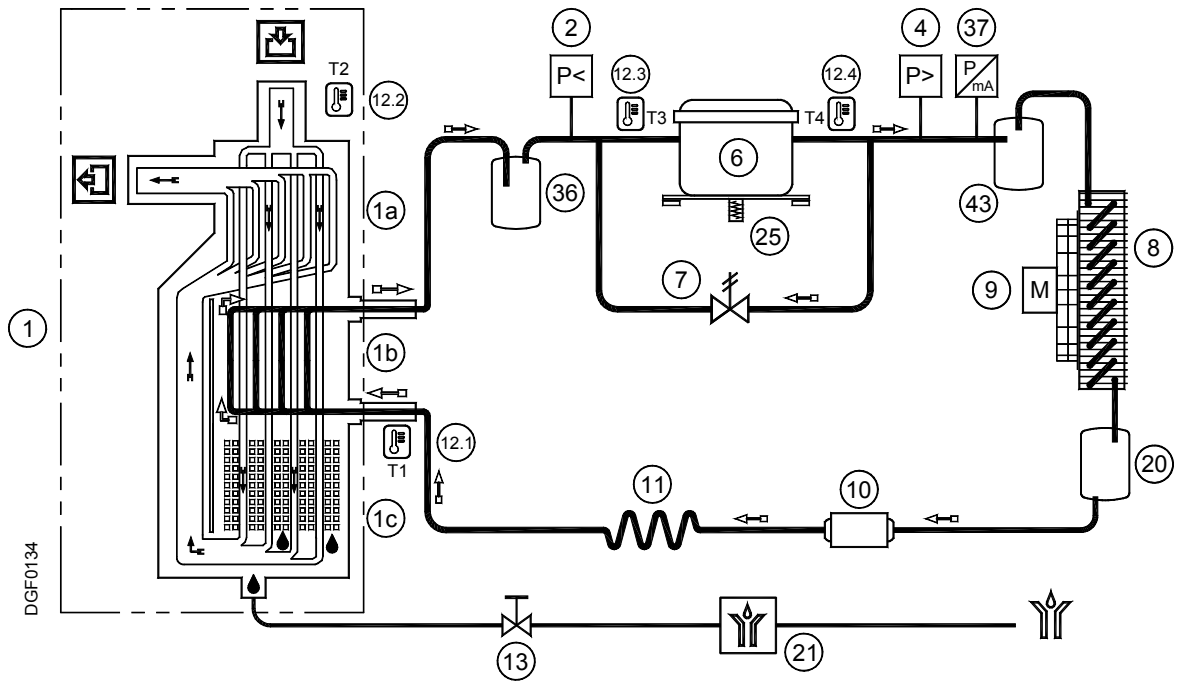

Donaldson® Ultrafilter

PRODUCT SPECIFICATIONS

Features	Benefits
Intelligent over-all concept	Type range, integrated monitoring and control functions as well as automatic condensate drain adapted for the use in central compressed air applications. Available in air or water cooled versions
17 sizes for nominal volume flows of 1260 m³/h to 21.000 m³/h	Accurate selection of the appropriate refrigeration compressed air dryer to the respective operating volume flow
Dew point control via hot gas bypass control	Robust and safe control of the dew point even under different load conditions
Electronic level-controlled condensate drain on the heat exchanger	Safe condensate drainage depending on the amount of condensate, without loss of compressed air. Includes function monitoring and alarm meessage
Compact and space-saving design with robust steel housing	Low space requirements at the installation site, low storage space requirement and low transport costs
Electronic control including display and display of actual pressure dew point, operating hours, service messages and alarm messages with numerous possibilities for individual adjustment	Reliable monitoring of the operating status and timely display of required maintenance work
Scroll compressor in refrigeration circuit	Reliable compression of the refrigerant at high running, low vibration and low noise operation
Aluminium heat exchanger	No corrosion inside the heat exchanger due to contact with moist compressed air; Good heat transfer properties at low weight
Flange connections for all sizes	Easy and safe connection to the compressed air network

Donaldson® Ultrafilter

PRODUCT SPECIFICATIONS

Type	Volume flow m³/h	Volume flow m³/min.	Differential pressure mbar	Cooling air requirement * m³/h	Cooling water requirement ** m³/h	Power consumption kW* / kW**	Power supply
DV 1260	1260	21	210	5400	0,76	2,60 / 2,30	3~/ 400V/ 50Hz (±10%)
DV 1650	1650	28	160	7200	0,98	3,10 / 2,70	3~/ 400V/ 50Hz (±10%)
DV 1800	1800	30	180	7400	0,99	3,50 / 3,00	3~/ 400V/ 50Hz (±10%)
DV 2000	2000	33	210	7400	1,11	3,50 / 3,00	3~/ 400V/ 50Hz (±10%)
DV 2300	2300	38	200	14400	1,23	4,30 / 3,80	3~/ 400V/ 50Hz (±10%)
DV 2800	2800	47	120	14400	1,27	4,80 / 3,90	3~/ 400V/ 50Hz (±10%)
DV 3500	3500	58	190	14800	2,03	5,60 / 4,70	3~/ 400V/ 50Hz (±10%)
DV 4300	4300	71	250	14800	2,54	6,40 / 5,50	3~/ 400V/ 50Hz (±10%)
DV 5500	5500	92	210	21600	2,87	8,40 / 7,00	3~/ 400V/ 50Hz (±10%)
DV 6250	6250	104	230	22200	3,26	10,60 / 9,40	3~/ 400V/ 50Hz (±10%)
DV 7000	7000	117	190	28800	3,79	11,30 / 9,50	3~/ 400V/ 50Hz (±10%)
DV 8750	8750	146	260	29600	4,34	16,80 / 14,90	3~/ 400V/ 50Hz (±10%)
DV 10500	10500	175	210	44400	5,58	18,30 / 14,90	3~/ 400V/ 50Hz (±10%)
DV 12500	12500	208	230	44400	6,52	21,60 / 18,70	3~/ 400V/ 50Hz (±10%)
DV 14000	14000	233	190	57600	7,58	22,60 / 18,90	3~/ 400V/ 50Hz (±10%)
DV 17500	17500	292	260	59200	8,68	33,60 / 29,80	3~/ 400V/ 50Hz (±10%)
DV 21000	21000	350	210	88800	11,16	36,60 / 29,80	3~/ 400V/ 50Hz (±10%)

Operating pressure:	max. 14 bar ü
Operating temperature:	max. 70°C
Ambient temperature:	+1°C...+50°C

* only air cooled versions

** only water cooled versions

SIZING

Operating pressure (bar g)	2	3	4	5	6	7	8	9	10	12	14
Correcion factor fp	0,49	0,66	0,77	0,86	0,93	1,00	1,05	1,06	1,14	1,21	1,27

Compressed air inlet temperature (°C)	≤ 25	30	35	40	45	50	55	60	65	70
Correcion factor fte	1,20	1,12	1,00	0,83	0,69	0,59	0,50	0,44	0,39	0,37

Temperature of cooling air or cooling water (°C)	≤ 25	30	35	40	45	50
Correction factor ftu	1,00	0,96	0,90	0,82	0,72	0,60

Pressure dewpoint (°C)	3	5	7	10
Correction factor ftpd	1,00	1,09	1,19	1,37

Example:

$\dot{V}_{nom}$ = 1800 m³/h (intake volume flow of the compressor), compressed air inlet temperature = 40°C, cooling water temperature = 35°C, operating pressure = 9 bar, pressure dewpoint = +3°C

$$\dot{V}_{korr} = \frac{\dot{V}_{nom}}{f} = \frac{1800\ m^3/h}{1{,}06 \times 0{,}83 \times 0{,}90 \times 1{,}00} = 2273\ m^3/h$$

Calculated dryer size:
DV 2300

Donaldson® Ultrafilter

DIMENSIONS

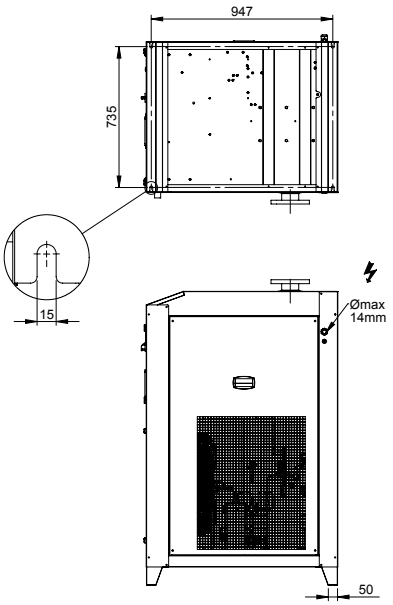

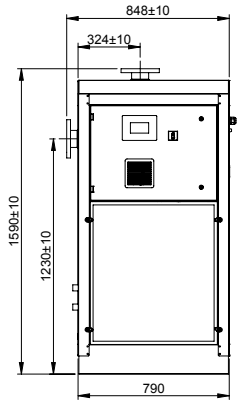

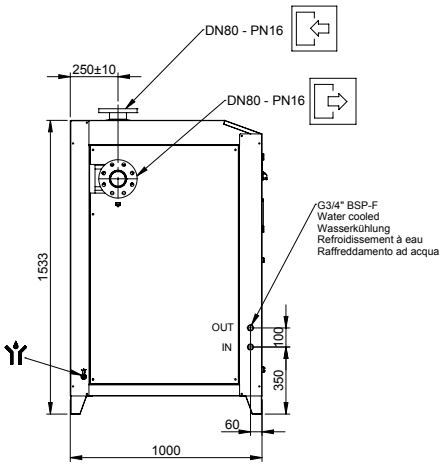

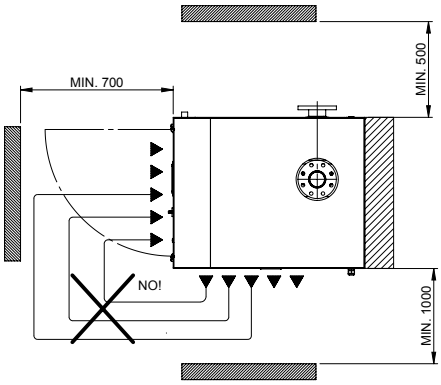

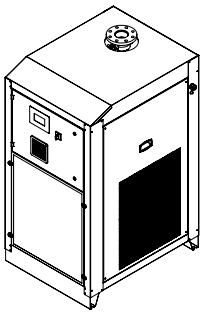

Type	Weight air cooled / water cooled kg	Air connections Inlet / Outlet DN	Water connections Inlet / Outlet BSP-F	Condensate connections BSP-F
DV 1260	229 / 214	80 - PN16	G 3/4“	G 1/2“
DV 1650	262 / 243	80 - PN16	G 3/4“	G 1/2“
DV 1800	263 / 240	80 - PN16	G 3/4“	G 1/2“
DV 2000	298 / 275	80 - PN16	G 3/4“	G 1/2“

DIMENSIONS

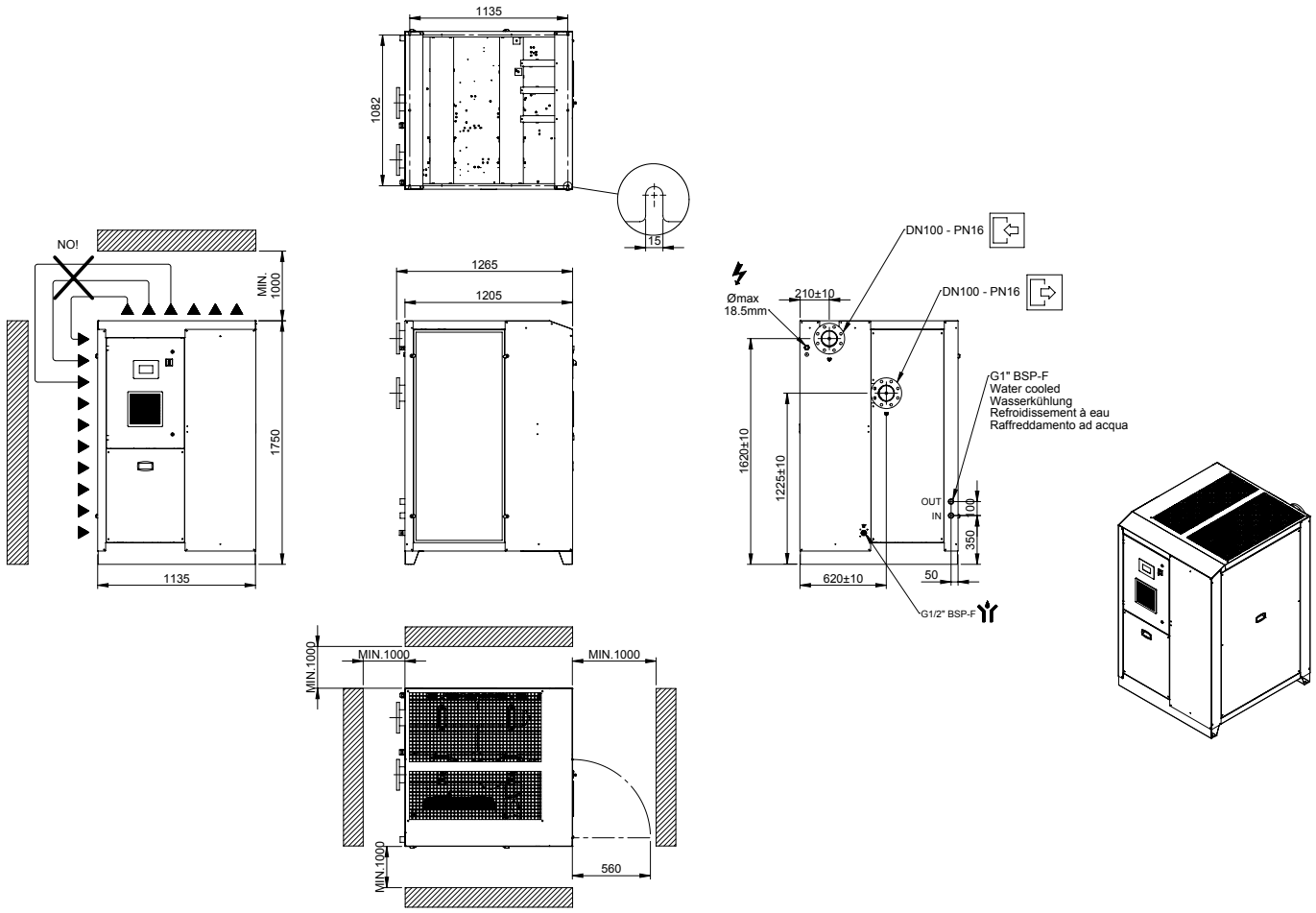

Type	Weight air cooled / water cooled kg	Air connections Inlet / Outlet DN	Water connections Inlet / Outlet BSP-F	Condensate connections BSP-F
DV 2300	537 / 505	100 - PN16	G 1"	G 1/2"
DV 2800	587 / 547	100 - PN16	G 1"	G 1/2"
DV 3500	597 / 557	100 - PN16	G 1"	G 1/2"
DV 4300	707 / 657	100 - PN16	G 1"	G 1/2"

DIMENSIONS

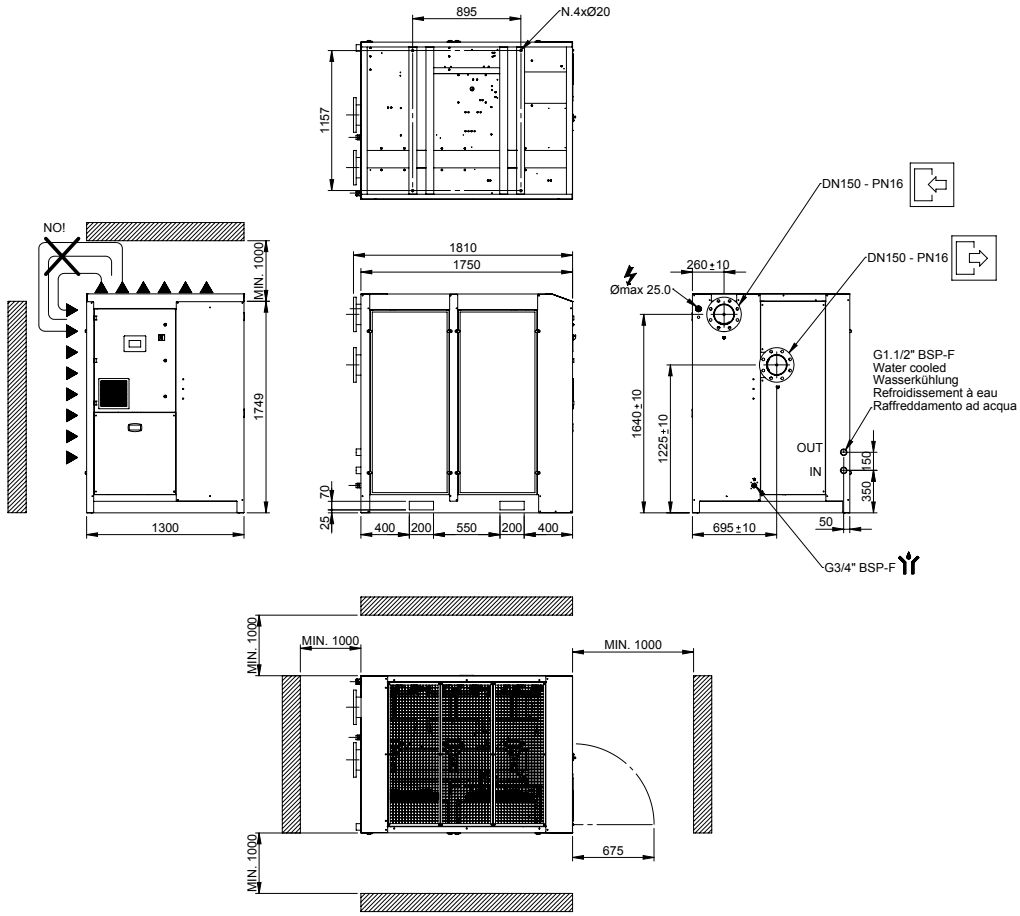

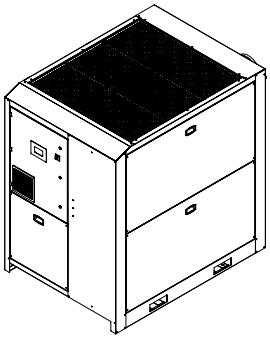

Type	Weight air cooled / water cooled kg	Air connections Inlet / Outlet DN	Water connections Inlet / Outlet BSP-F	Condensate connections BSP-F
DV 5500	820 / 760	150 - PN16	G 1 1/2"	G 3/4"
DV 6250	990 / 990	150 - PN16	G 1 1/2"	G 3/4"

DIMENSIONS

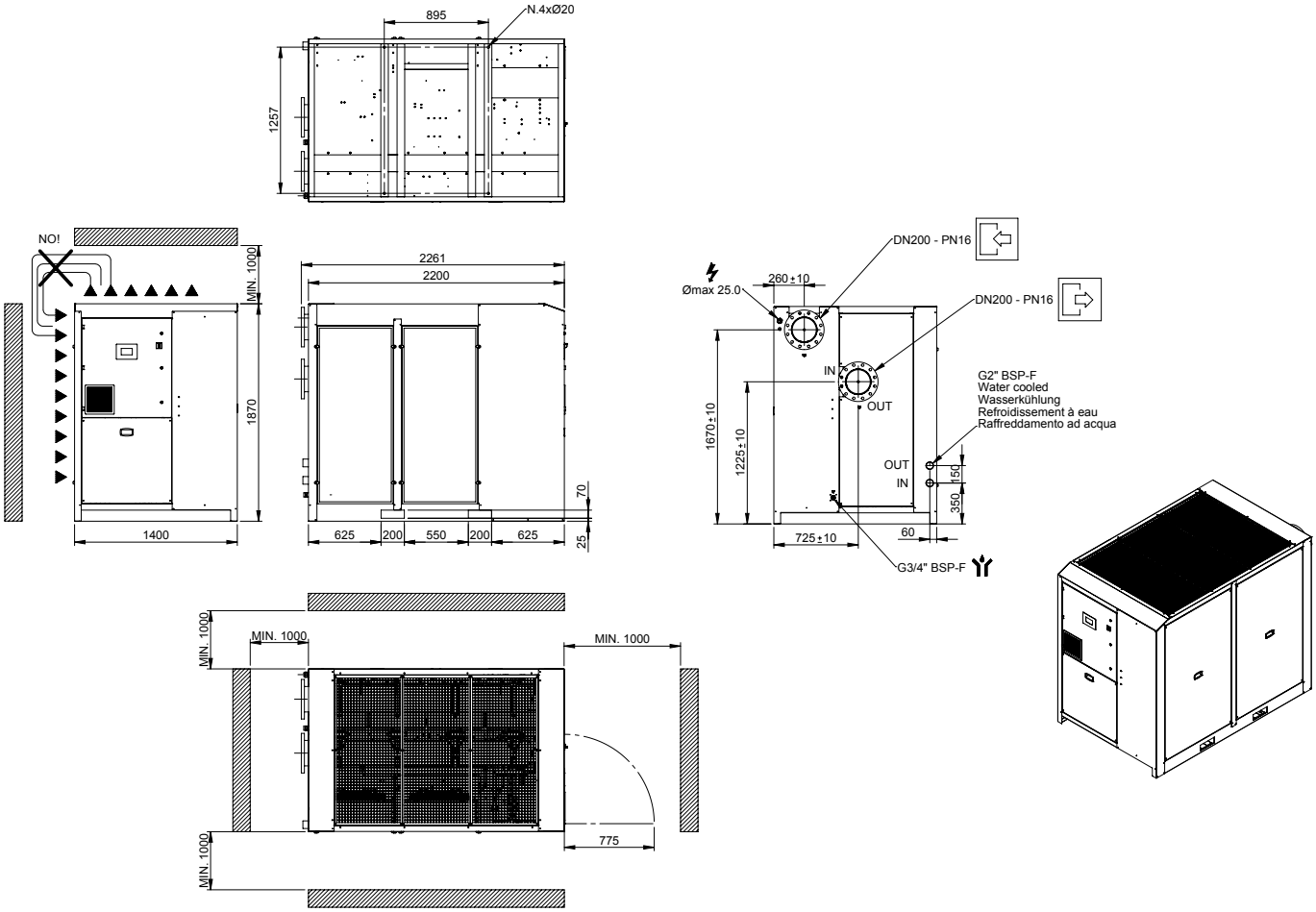

Type	Weight air cooled / water cooled kg	Air connections Inlet / Outlet DN	Water connections Inlet / Outlet BSP-F	Condensate connections BSP-F
DV 7000	1010 / 1010	200 - PN16	G 2"	G 3/4"
DV 8750	1360 / 1360	200 - PN16	G 2"	G 3/4"

DIMENSIONS

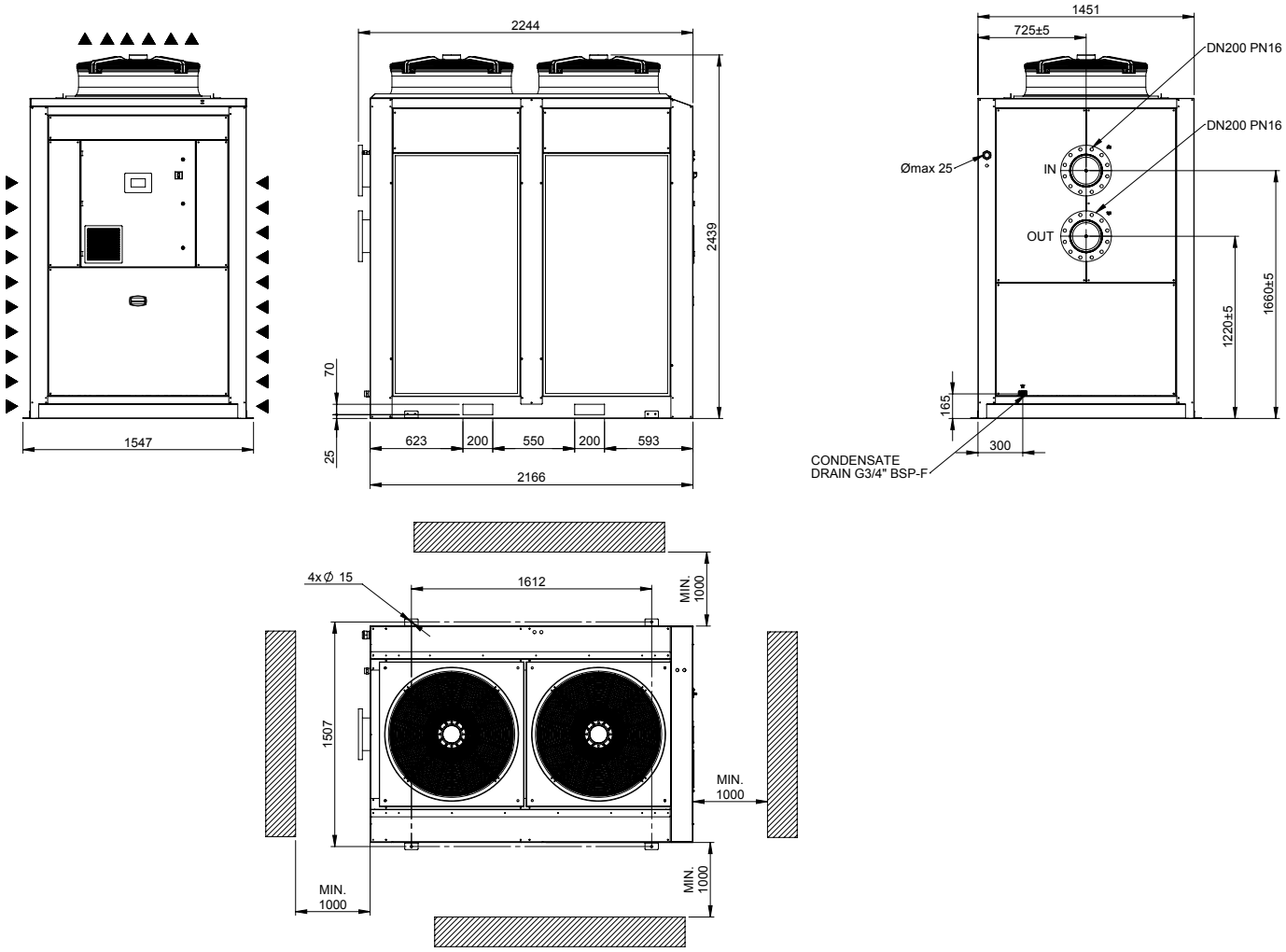

Type	Weight air cooled / water cooled kg	Air connections Inlet / Outlet DN	Water connections Inlet / Outlet BSP-F	Condensate connections BSP-F
DV 10500 AB	1530 /---	200 - PN16	---	G 3/4“

DIMENSIONS

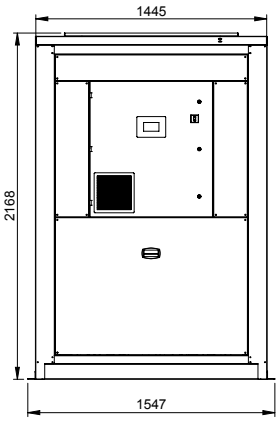

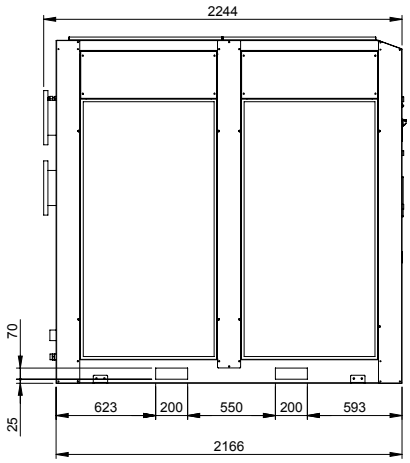

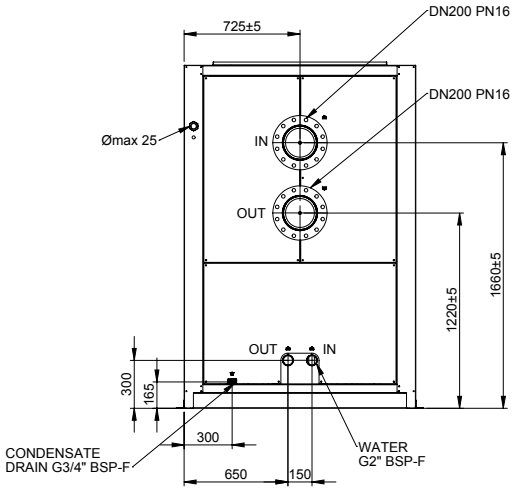

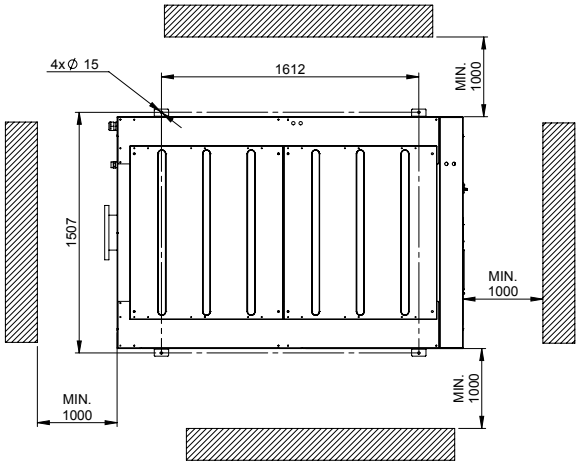

Type	Weight air cooled / water cooled kg	Air connections Inlet / Outlet DN	Water connections Inlet / Outlet BSP-F	Condensate connections BSP-F
DV 10500 WB	--- / 1530?	200 - PN16	G 2“	G 3/4“

DIMENSIONS

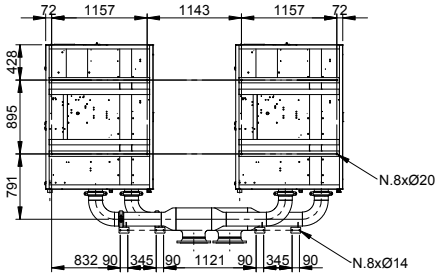

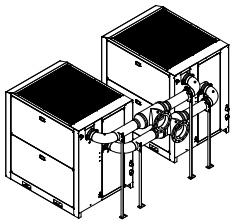

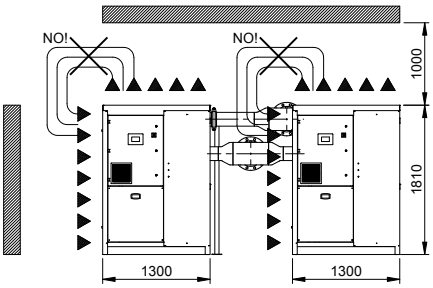

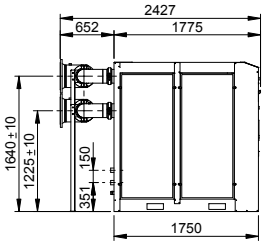

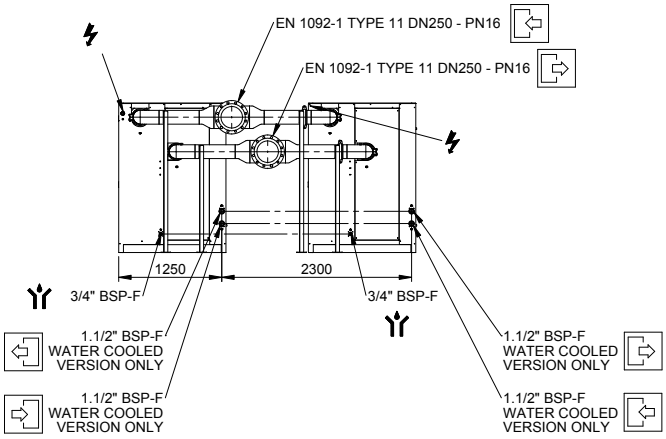

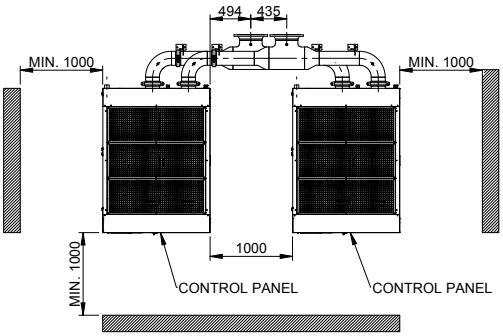

Type	Weight air cooled / water cooled kg	Air connections Inlet / Outlet DN	Water connections Inlet / Outlet BSP-F	Condensate connections BSP-F
DV 12500	2258 / 2258	250 - PN16	1 1/2“ BSP-F	G 3/4“

DIMENSIONS

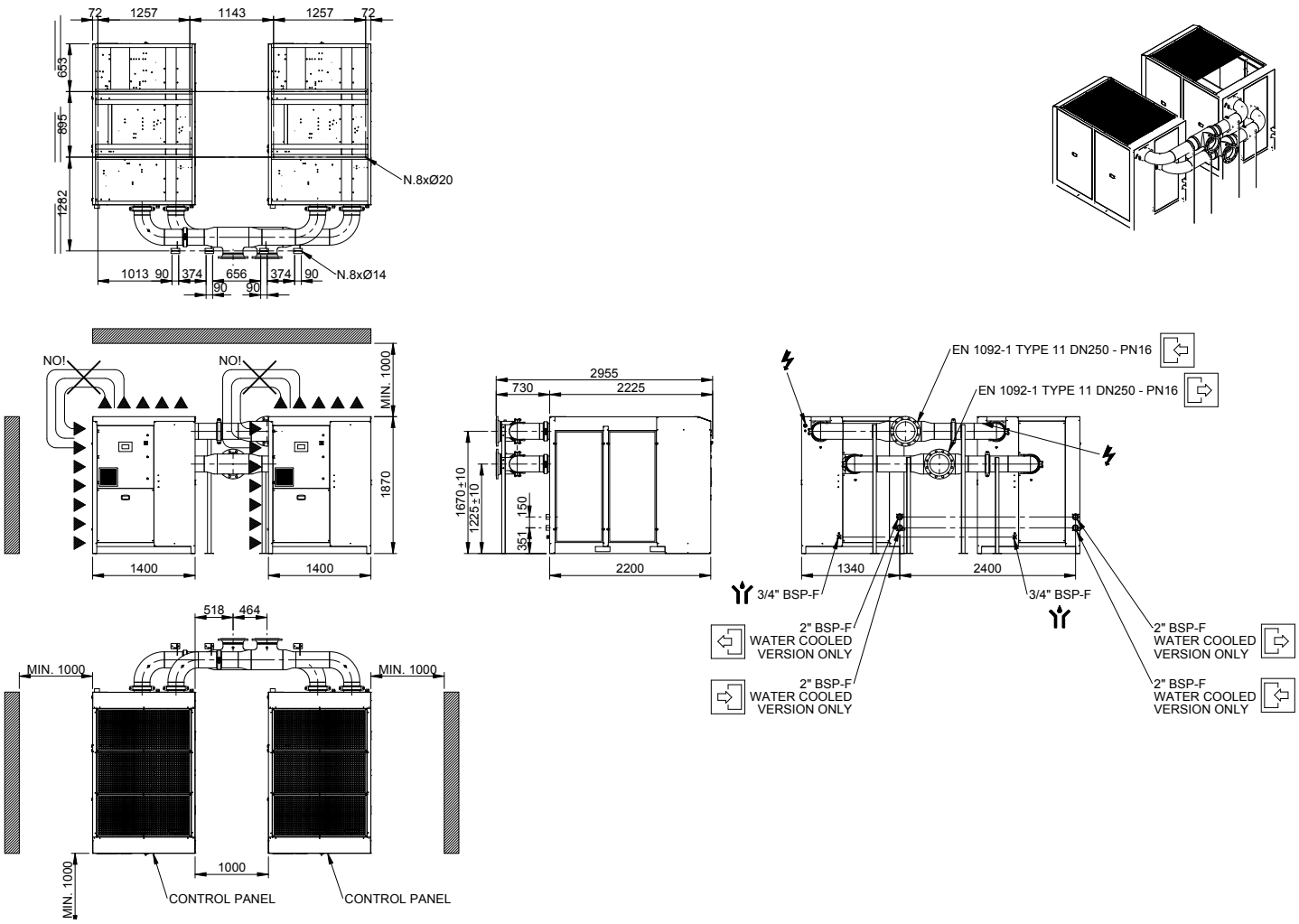

Type	Weight air cooled / water cooled kg	Air connections Inlet / Outlet DN	Water connections Inlet / Outlet BSP-F	Condensate connections BSP-F
DV 14000	2450 / 2450	250 - PN16	2“	G 3/4“
DV 17500	3150 / 3150	250 - PN16	2“	G 3/4“

DIMENSIONS

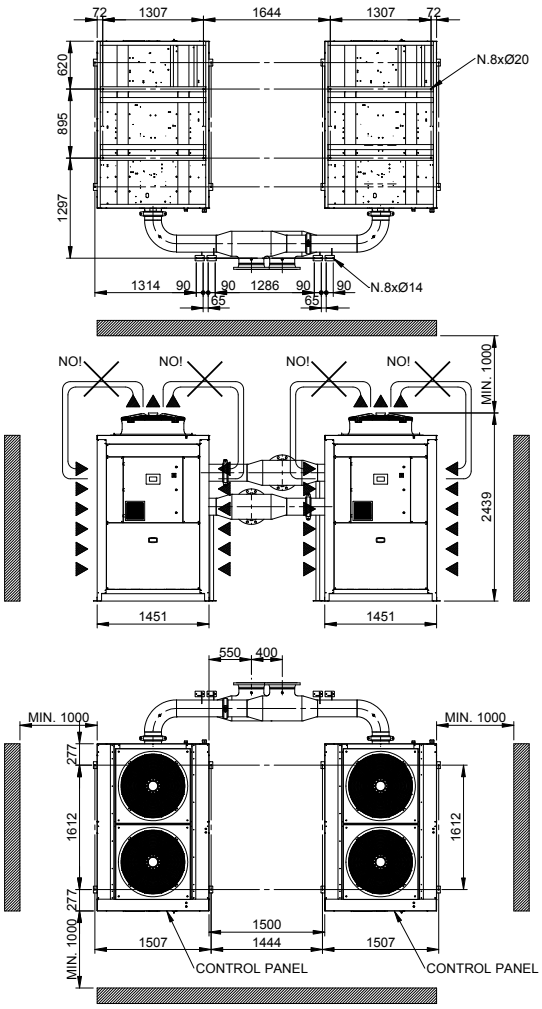

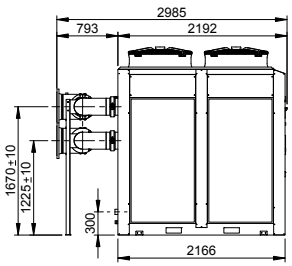

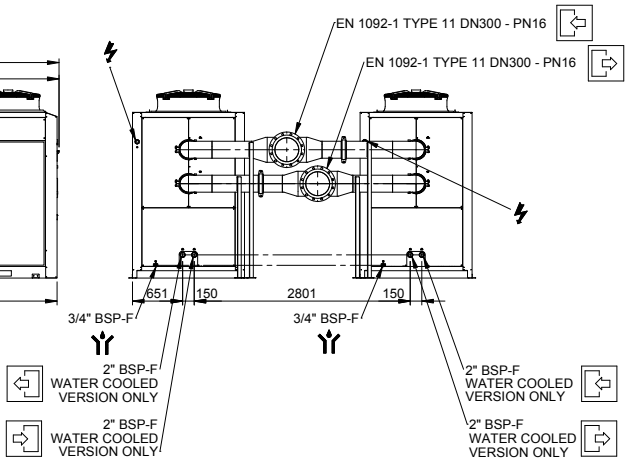

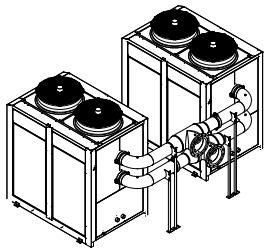

Type	Weight air cooled / water cooled kg	Air connections Inlet / Outlet DN	Water connections Inlet / Outlet BSP-F	Condensate connections BSP-F
DV 21000	3513 / 3313	300 - PN16	2"	3/4"

Donaldson®
Ultrafilter