Dryer Systems

Heat Regenerating Adsorption Dryers

Ultradryer HRE 0375 - 13600

MAIN FEATURES & BENEFITS

- 19 sizes available, matching to the compressor flow capacities
- Energy-efficient regeneration (desorption) in counter-current flow
- Applicable in all climate zones due to cooling by partial current flow of the dry air
- Pressure dewpoint of -40°C as standard, individual cases down to -70°C possible
- Robust design with welded steel vessels and flanged pipelines
- Service-friendly design of butterfly valves and pressure reducing valves for fast replacement of wearing parts
- Robust, efficient programmable controller of the latest generation, for which service and support are guaranteed beyond the next decade
- Touch Panel with a high operational comfort; The main menu shows a system overview with the operational data such as pressure, temperature, cycle of the vessels etc.
- Comprehensive option package: dewpoint dependent capacity control, start-up-device, free of silicone and parting agents, bypass line, filter extension etc.
- Suitable high-efficiency filters as pre- and afterfilter (option) ensure a low differential pressure for the complete unit and thus small operating costs

HRE 2750

INDUSTRIES

- Chemical and electrical industry

- Machine building industry and plant engineering / construction

- Automotive industry

Donaldson Filtration Deutschland GmbH
Büssingstr. 1
D-42781 Haan
Tel.: +49 (0) 2129 569 0
Fax: +49 (0) 2129 569 100
E-Mail: CAP-de@donaldson.com
Web: www.donaldson.com

Donaldson® Ultrafilter

F119008_06_2018_ENG

Technical alterations reserved (6/2018)

PRODUCT DESCRIPTION

The externally heat regenerated adsorption dryers HRE 0375-13600 work according to the dynamic adsorption principle. Wet compressed air streams through a desiccant bed. While streaming through, moisture is drawn out of the compressed air. Since the adsorption capacity of the desiccant is limited, the flow direction has to be changed before the desiccant is completey saturated. Using two parallel adsorption vessels (adsorbers **AD1 + AD2**) with alternating function, the permanent supply of dried air for consumers is guaranteed.

One adsorber is always available for drying the compressed air. The second adsorber is regenerated at the same time. The activation time re-spectively the regeneration time is always shorter than the loading time of the working adsorber.The regeneration of the saturated desiccant is realized in two steps:

1. Desorption in counter-current flow to the adsorption direction with externally heated blower air
2. Cooling of the heated desiccant with a partial stream of dried compressed air

Typical applications for the adsorption dryers HRE are:

- **Central compressed air purification**
  Generation of dry, oil-free and particulate-free compressed air (with option pre- and afterfilter)
- **Point-of-use applications**
  Drying and purification of control and instrument and process air
- **Automotive industry**
  Purification of compressed air for painting applications

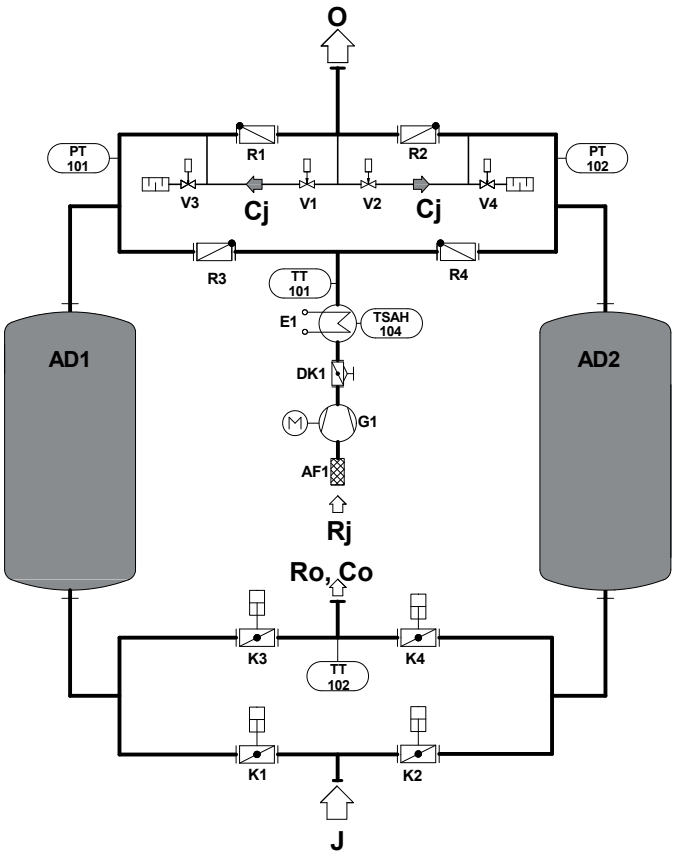

J: Wet air - inlet

O: Dry air - outlet

Rj: Desorption air - inlet

Ro: Desorption air - outlet

Cj: Cooling air - inlet

Co: Cooling air - outlet

PRODUCT SPECIFICATIONS

Features:	Benefits:
19 sizes available, matched to the compressor flow capacities	Custom made solutions possible, matching exactly customer's requirements; no oversizing of compressors necessary, due to lowest possible regeneration air requirements
Energy-efficient regeneration (desorption) in counter-current flow	Low desorption temperature, less energy consumption
Cooling of the heated desiccant by small partial current flow of the dry air	Independently of ambient temperature and humidity, applicable in tropical environment, if necessary also very low dewpoints (PDP -70°C) realizable
Welded steel vessels and flanged pipelines	Robust service-friendly design
Easy accessibility of all components. Service-friendly design of pressure reducing valves and butterfly valves (two-piece housings)	Fast replacement of wearing parts ensure low service and maintenance cost and reduced downtime
Programmable logic controller Simatic S7-1200	Robust, efficient controller of the latest generation, custom made solutions possible
Touch Panel KTP700	High operational comfort due to self-explaining menu. All operational data on one view. Indication of current dewpoint (option) and function status as well as alarm and service messages on the main menu ensures high operating safety of the adsorption dryer
Comprehensive option package: Dewpoint depending control, start-up device, free of silicone and parting agents, bypass, filter extension etc.	Flexibility in application, well thought option package for economic operation and safe system installation in the compressed air network
Suitable high-efficiency filters as pre- and afterfilter available (option)	Low differential pressure of the complete unit and thus small operating costs
Ultraconomy version including dewpoint dependent capacity control (option)	Saving of energy and operational costs due to adaption of the adsorption cycle to the current operating conditions

Technical Data	
Adsorption vessel	
Material:	Carbon steel
Design data:	11 bar (g), 230°C for 0375 - 2750 10 bar (g), 200°C for 3500 - 13600
Design, manufacturing and testing:	acc. to AD 2000
Approval:	acc. to PED 2014/ 68/ EU
Gas distributor:	Stainless steel
Piping	
Nominal pressure:	PN 16
Material:	Carbon steel
Design, manufacturing and testing:	acc. to AD 2000
Approval:	acc. to PED 2014/ 68/ EU

PRODUCT SPECIFICATIONS

Standard conditions		
Pressure dewpoint:	-40°C	Selection at different operating conditions by correction factor f according to table “sizing”
Operating pressure:	7 bar (g)	
Inlet temperature:	+35°C	
Inlet humidity:	saturated	
Average cooling air consumtion:	ca. 2% related to $\dot{V}_{nom}$	
Operating limits		
Media:	Compressed air/ Nitrogen	Design for operating conditions beyond specified application limits on request
Operating pressure:	4 - 10 bar (g)	
Inlet temperature:	5 - 40°C	
Ambient temperature:	5 - 40°C	
Max. blower inlet:	35°C/ 45% r.h. to 30°C/ 60% r. h.	
Installation:	indoor	
Controller (standard version)		
Design:	acc. to VDE/ IEC	Special versions on request
Power supply:	3 Phases / 400V - 50 Hz	
Control voltage:	24 VDC / 230 VAC - 50 Hz	
PLC:	Siemens S7-1200 with CPU 1214C	
Text display:	Siemens KTP 700	
Protection class:	IP 54, acc. to IEC 529	
Control box:	C-steel sheet, powder coated, RAL 7035	
Potential free common alarm contact:	incl.	
Main switch:	incl.	

SIZING

Type	Pressure Dewpoint (PDP)	Inlet temperature	Operating pressure (bar)						
			4	5	6	7	8	9	10
HRE	-40°C	30°C	0,72	0,92	1,09	1,25	1,36	1,45	1,51
		35°C	0,55	0,70	0,86	1,00	1,12	1,25	1,37
		40°C	0,33	0,45	0,58	0,71	0,82	0,92	1,03
			Correction factors (f)						

Example:

$\dot{V}_{nom}$ = 3990 m³/h, inlet temperature = 40°C, operating pressure = 6 bar (g), PDP = -40°C

$$\dot{V}_{korr} = \frac{\dot{V}_{nom}}{f} = \frac{3990\ m^3/h}{0{,}58} = 6879\ m^3/h$$

Calculated dryer size:
Type HRE 7000

DIMENSIONS

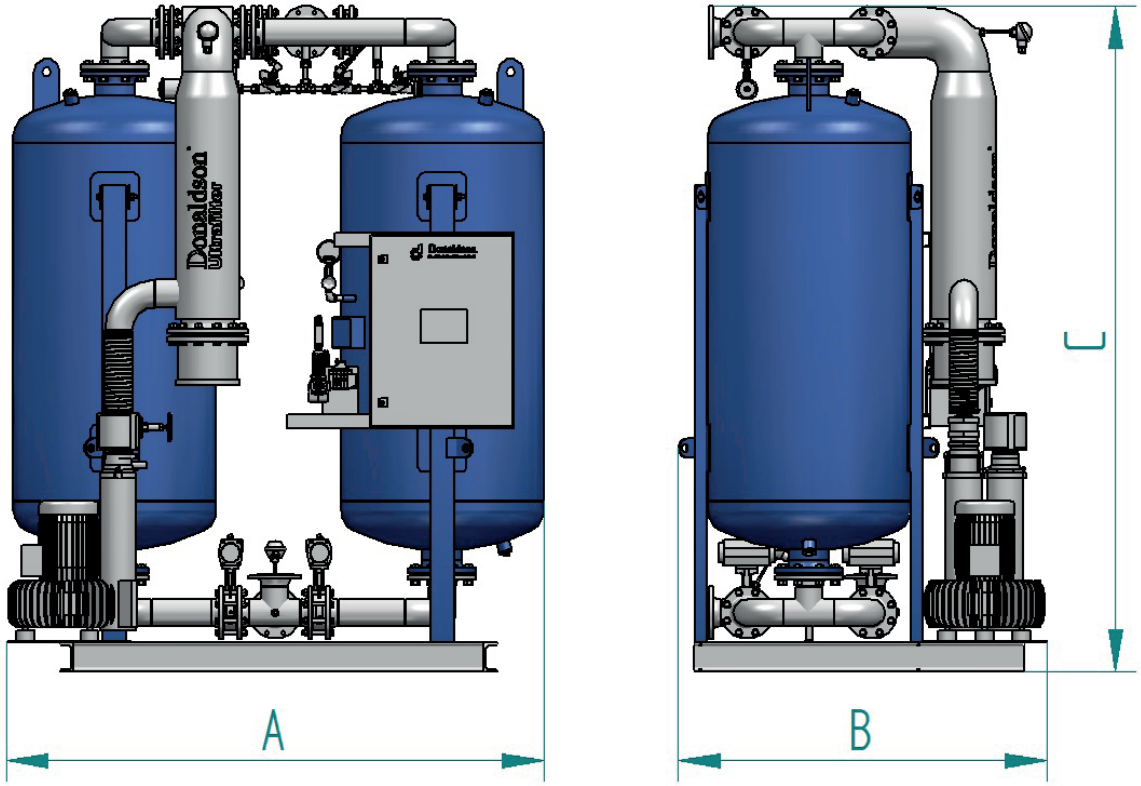

Type	$\dot{V}_{nom}$ at 7 bar (g)		Connections	Installed Power	Dimensions			Weight
	m³/h	cfm	PN 16, DIN EN 1092	kW	A mm	B mm	C mm	kg
0375	375	220	DN 50	7,6	1460	990	2140	760
0550	550	325	DN 50	11,2	1520	1120	2340	920
0650	650	385	DN 50	11,2	1540	1140	2260	1100
0850	850	500	DN 50	14,2	1580	1210	2330	1210
1000	1000	590	DN 80	14,2	1640	1170	2460	1400
1350	1350	800	DN 80	20,0	1830	1290	2580	1500
1650	1650	975	DN 80	24,0	1850	1410	2630	1830
1950	1950	1150	DN 100	32,5	2030	1450	2720	2130
2250	2250	1330	DN 100	32,5	2100	1480	2740	2280
2750	2750	1620	DN 100	38,0	2250	1550	2790	2680

$\dot{V}_{nom}$ in m³/h related to compressor inlet at 20°C and 1 bar (a), an operating pressure of 7 bar (g) and a compressed air inlet temperature of +35°C (saturated).

DIMENSIONS

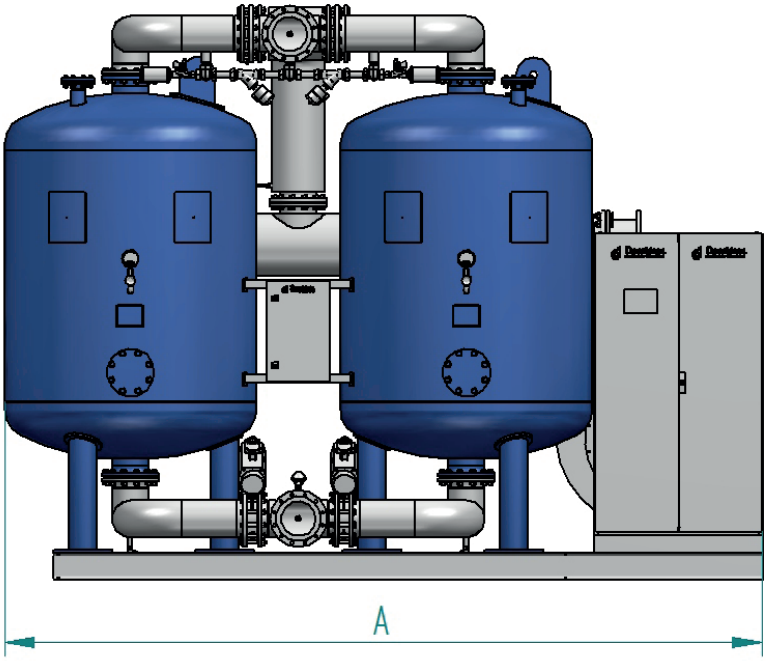

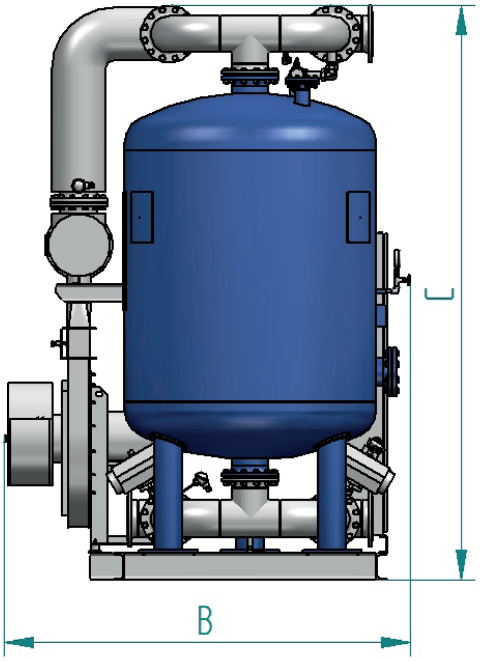

Type	$\dot{V}_{nom}$ at 7 bar (g)		Connections	Installed Power	Dimensions			Weight
	m³/h	cfm	PN 16, DIN EN 1092	kW	A mm	B mm	C mm	kg
3500	3500	2065	DN 100	44,5	3350	1800	2860	3350
4000	4000	2360	DN 150	52,5	3450	1820	2980	3990
5000	5000	2945	DN 150	71,0	3770	1920	3110	5000
6000	6000	3535	DN 150	86,0	3910	2070	3210	6200
7000	7000	4125	DN 150	95,0	4100	2190	3270	6700
8750	8750	5155	DN 200	115,0	4520	2430	3420	8470
10500	10500	6185	DN 200	135,0	4780	2600	3310	11200
11500	11500	6770	DN 200	153,0	4970	2750	3350	12000
13600	13600	8010	DN 200	177,5	5280	2980	3380	14000

$\dot{V}_{nom}$ in m³/h related to compressor inlet at 20°C and 1 bar (a), an operating pressure of 7 bar (g) and a compressed air inlet temperature of +35°C (saturated).