Industrial Gases

Ultradryer HRE+ 0375 - 8750
Heat-Regenerated Adsorption Dryer

PRODUCT DESCRIPTION

The Ultradryer HRE+ range is designed for drying of compressed air and nitrogen in a pressure range in applications up to 10 bar. The drying process is based on adsorption of water molecules out of a gas stream using hygroscopic desiccant materials. With this drying concept pressure dewpoints of -40°C (at 7 bar) or lower can be achieved.

The regeneration of saturated desiccant is done by using ambient air for the desorption of water and cooling the hot desiccant with ambient air and final purge cooling with a partial amount of dry air or gas. The pressure vessels and all main process pipelines are made of steel with flange connections.

An electronic control system with SIEMENS S7-1215C PLC and touch display SIEMENS KTP700 enables automated control of all phases of the drying and regeneration cycle. It includes the Ultraconomy dewpoint monitoring and control system for energy efficient and reliable operation.

MAIN FEATURES & BENEFITS

- **Heat-regenerated adsorption dryer with ambient air regeneration and purge cooling concept**

Utilization of compression heat during heating process and combination of ambient air cooling with final purge cooling lead to energy-efficient desiccant regeneration at even high ambient temperature and high ambient humidity conditions.

- **Ultraconomy dewpoint control included**

Monitoring and control of dewpoint support full utilization of desiccant capacity and trigger the regeneration process. This allows energy and cost saving as well as full drying performance control.

- **Reliable and stable dewpoint performance even under challenging conditions**

Purge cooling concept as well as applied cycle-times (6 hours cycle) and special desiccant layer concept provide high operation safety and reliability even at challenging operating conditions.

- **Condition Monitoring and Data Transfer**

Several individual condition messages, signal inputs/outputs and alarm contacts available as standard. Controller is ready for upgrades with further monitoring and data transfer standard options.

INDUSTRIES

- Industrial Machinery

- Food Processing

- Electronics

- Automotive

Technical alterations reserved (12/2025)

F119008_EN_2025_12_REV02

PRODUCT DESCRIPTION

The adsorption dryer consists of two adsorber vessels (AD1 / AD2) filled with desiccant. While one adsorber is in drying phase, the other adsorber is being regenerated.

In the drying phase compressed air is entering the unit at the wet air inlet (J) and is led through the butterfly valve K1 (K2) into the adsorber AD1 (see example). It flows though the adsorber from bottom to top and adsorbs the humidity on the desiccant. Via a non-return valve R1 (R2) it flows to the dry air outlet (O). The dewpoint is measured by the dewpoint transmitter MT101.

While adsorber AD1 is in drying phase, adsorber AD2 is being regenerated. Therefore, the pressure in adsorber AD2 is released via valve V4 (V3) and ambient air is sucked-in via a blower (G1) and is heated by an electrical heater (E1). The desorption temperature is controlled by a temperature transmitter TT101. Via the non-return valve R4 (R3) the heated air is flowing from top to bottom through the adsorber AD2 and is picking-up the water molecules which are adsorbed on the desiccant. The heated air is flowing through the butterfly valve K4 (K3) to the regeneration air outlet (Ro). The heating phase is finished when the setpoint on temperature transmitter TT102 is reached.

During the pre-cooling phase the blower is running while the heater is switched off. For final purge cooling the blower is switched off and valve V2 is opened. A partial flow of dry compressed air or gas flows from top to bottom through adsorber AD2 (AD1), is picking-up remaining water from the desiccant and cools it further down. Via butterfly valve K4 (K3) the cooling air is leaving the dryer at the cooling air outlet (Co). Cooling phase is finished when the setpoint on temperature transmitter TT102 is reached. At the end of the regeneration cycle the pressure in adsorber AD2 is built-up again by closing butterfly valve K4 (K3) and keeping valve V2 (V1) open until pressure equalization is finished.

The switch-over for the adsorbers AD1 and AD2 from drying to regeneration or vice versa is triggered by controlling the dewpoint on transmitter MT101, when the dewpoint limit value is exceeded.

Drying + Heating Phases

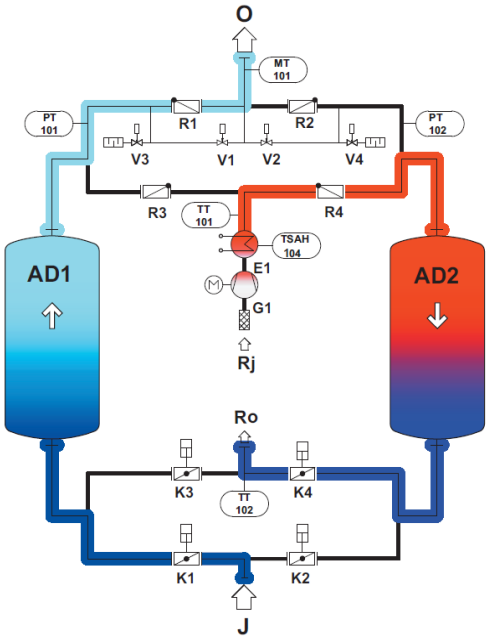

Drying + Cooling Phases

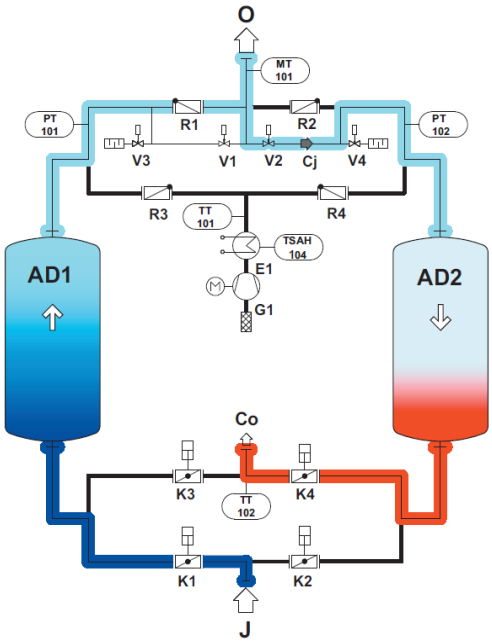

J = Wet air inlet
O = Dry air outlet
Rj = Desorption air inlet
Ro = Desorption air outlet
Cj = Cooling air inlet
Co = Cooling air outlet

Donaldson. FILTRATION SOLUTIONS

PRODUCT DESCRIPTION

FEATURES	BENEFITS
Heat-regenerated adsorption dryer with ambient air regeneration and final purge cooling concept	Utilization of compression heat during heating process and combination of ambient air cooling with final purge cooling lead to energy-efficient desiccant regeneration at even high ambient temperature and high ambient humidity conditions.
Ultraconomy dewpoint control	Monitoring and control of dewpoint ensure full utilization of desiccant capacity. High energy and cost saving opportunity as well as full drying performance control.
Final purge cooling concept as well as 6 hours cycle and special desiccant layer concept	Reliable and stable dewpoint performance even under challenging conditions.
Welded steel vessels and flanged main pipeline design	Robust, long-life, and service-friendly design
16 dryer sizes from 375 up to 8750 m³/h nominal flow capacity	Wide range of dryer flow capacities and connection sizes matching to user requirements.
Programmable logic controller Simatic S7-1215C	Controller ready for Industry 4.0 and various connectivity options. Opportunity for dryer condition and performance monitoring.
Touch Panel KTP700	High operational comfort due to self-explaining menu. Indication of all operation data incl. dewpoint and function status as well as alarm and service messages on the main menu ensures high operating safety.
Valve position control incl. alarm message indication and failure management concept	Valve position control on main switch-over valves for reliable and safe operation
230 V AC power supply for up to 4 condensate drains included	No external power supply needed; reduced installation effort and cost.
4 x condensate drain alarm inputs and additional 4 x individual alarm inputs included	Enhanced monitoring of compressed air system performance including individual alarm messages.
Control box temperature control	Air-cooler fan, thermostat and filter for control box cooling included for safe operation at even challenging ambient temperatures.
Single conductor cable marking	Easy identification of cable connection for trouble shooting or replacement of electrical components.
High temperature resistant painting process	Long-life corrosion protection

Donaldson. FILTRATION SOLUTIONS

PRODUCT DESCRIPTION

In addition to the features already included in the standard dryer configuration, a range of defined standard options are available.

OPTIONS	DESCRIPTION AND BENEFITS
ENERSAVE Concept	Optimized desiccant layer concept requires lower regeneration temperature and offers additional energy saving opportunities in a range of 10-14% less average power consumption (at nominal flow and conditions).
Adsorber vessel and pipeline insulation	Insulation of heater housing is already included in standard configuration. Further options of adsorber vessel insulation and upper and lower pipelines optionally available for saving of heat energy and protection against hot surfaces.
„Weekend STOP“ Mode	Shut-off of air flow across dewpoint sensor and additional output on controller for closing a shut-off valve downstream the dryer when controller is switched off. Dryer remains under pressure during shut-down period (e.g. during weekend).
Differential pressure monitoring	Differential pressure transmitter for monitoring of differential pressure from inlet of dryer (or pre-filters) to outlet of dryer (or after-filters). Control of dryer and filter condition. Data are indicated on controller. Alarm set-point and indication possible.
Flow monitoring	Flow transmitter for monitoring of flow demand and characteristics at dryer outlet. Can be combined with energy monitoring option.
Energy monitoring and management	Energy management 1 without flow monitoring: Measurement of voltage, current and power consumption per hour. Energy management 2 with flow monitoring: Measurement of voltage, current and power consumption per hour and per m^3/h. Power consumption of dryer under control
Data communication options	Option 1: Communication Processor for MODBUS TCP/IP Option 2: MODBUS RTU Module Option 3: Profibus Module Data link to user network for full monitoring of dryer status, service and alarm messages and sensor data
MMC card	Back-up memory for original dryer program
Seaworthy Packaging	Packaging option for special transport / storage conditions
Further options on request	Individual dryer configuration as per customer's requirements and custom-made solutions, also for other industrial gases available on request.

Donaldson. FILTRATION SOLUTIONS

PRODUCT DESCRIPTION

TECHNICAL DATA	
Adsorber Vessel	
Pressure Vessel Material	Carbon steel
Design Data	Design pressure: 11 bar g (sizes 0375- 2750) 10 bar g (sizes 3500- 8750) Design temperature: -10°C / 230°C
Design, Manufacturing and Testing	Acc. to EN 13445
Approval	Acc. to PED 2014/68/EU
Flow Distributor Material	Stainless steel
Piping	
Design Data	Flange pressure rating: PN16 Design pressure: 10 bar g Design Temperature: -10°C / 230°C
Piping Material	Carbon steel
Design, Manufacturing and Testing	Acc. to AD 2000
Approval	Acc. to PED 2014/68/EU
Electrical Controller	
Design	Acc. to VDE / IEC
Power Supply	3 Phases / 400 V – 50 Hz
Control Voltage	24 V DC / 230 V AC – 50 Hz
PLC	Siemens S7-1200 with CPU 1215C
Touch Display	KTP 700
Protection Class	IP 54, acc. to IEC/EN 60529
Control Box Material	Carbon steel, powder coated, RAL 7035
Potential-Free Alarm Contact	Included
Main Switch	Included
Remote On/Off Contact	Included

Donaldson. FILTRATION SOLUTIONS

PRODUCT DESCRIPTION

TECHNICAL DATA	
Nominal Standard Conditions	
Pressure Dewpoint	-40°C
Operating Inlet Pressure	7 bar g
Operating Inlet Temperature	35°C
Inlet Humidity	100% saturated
Operating Limits	
Media	Compressed Air / Nitrogen
Operating Pressure	4 – 10 bar g
Operating Temperature	5 – 40°C
Ambient Temperature	5 – 40°C
Maximum Temperature / Humidity Conditions Blower	35°C / 45% r.H. to 30°C / 60% r.H.
Installation	Indoor

INLET / OUTLET CONNECTION DIRECTION

HRE 0375- 2750:
Inlet on Dryer Front Side
Outlet on Back Side

HRE 3500 - 8750
Inlet and Outlet on Dryer Front Side

PRODUCT DESCRIPTION

Technical Data				
HRE	Nominal Volume Flow (1 bar, 20°C) m^3/h[1]	Pipe Connection Size	Installed Power kW	Differential Pressure mbar[2]
0375	375	DN50	7.8	100
0550	550	DN50	11.5	100
0650	650	DN50	11.5	110
0850	850	DN50	14.5	130
1000	1000	DN80	14.5	110
1350	1350	DN80	20.0	150
1650	1650	DN80	24.0	110
1950	1950	DN100	32.5	100
2250	2250	DN100	32.5	110
2750	2750	DN100	38.0	130
3500	3500	DN100	44.5	100
4000	4000	DN150	52.5	80
5000	5000	DN150	71.0	90
6000	6000	DN150	86.0	100
7000	7000	DN180	95.0	120
8750	8750	DN200	115.0	80

[1] Nominal flow at 7 bar g, 35°C; [2] at nominal flow

Donaldson. FILTRATION SOLUTIONS

SIZING

Type	Pressure Dewpoint (PDP)	Inlet Temp.	Operating Pressure (bar g)						
			4	5	6	7	8	9	10
			Correction Factor (f)						
HRE	-40°C	30°C	0.72	0.92	1.09	1.25	1.36	1.45	1.51
		35°C	0.55	0.70	0.86	1.00	1.12	1.25	1.37
		40°C	0.33	0.45	0.58	0.71	0.82	0.92	1.03

Sizing Example:

Volume flow V_{nom} = 4000 m³/h, inlet temperature = 40°C, operating pressure = 6 bar g, PDP = -40°C

$$Vcorr = \frac{Vnom}{f} = \frac{4000\ m^3/n}{0.58} = 6897\ \mathrm{m^3/h}$$

Calculated dryer size = HRE 7000

Donaldson. FILTRATION SOLUTIONS

DIMENSIONS / WEIGHT

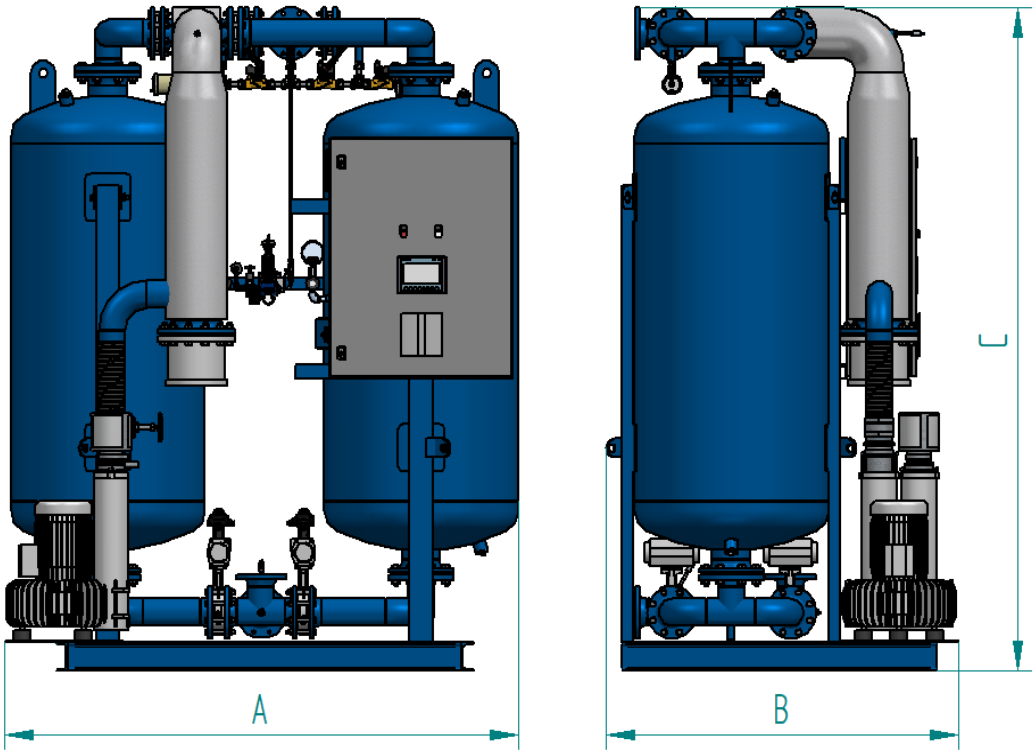

HRS	Flange Connection	Weight kg	A mm	B mm	C mm
0375	DN50	760	1451	1014	2137
0550	DN50	920	1520	1110	2334
0650	DN50	1100	1535	1130	2255
0850	DN50	1210	1579	1210	2323
1000	DN80	1400	1760	1160	2460
1350	DN80	1500	1890	1290	2580
1650	DN80	1830	1890	1410	2630
1950	DN100	2130	2060	1430	2710
2250	DN100	2280	2110	1460	2730
2750	DN100	2680	2250	1540	2780

DIMENSIONS / WEIGHT

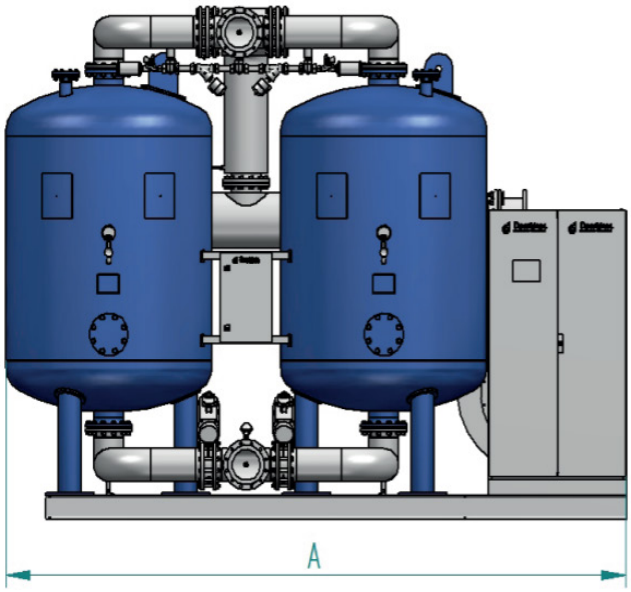

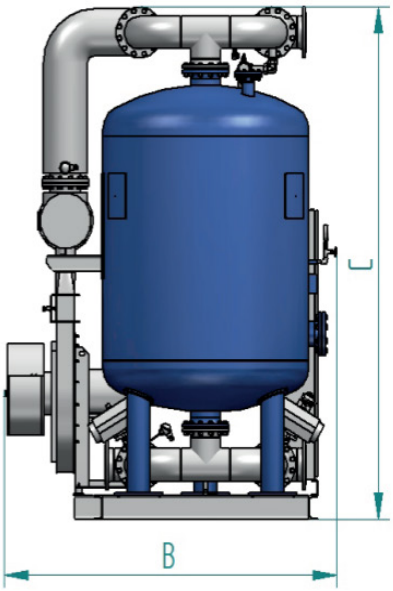

HRE	Flange Connection	Weight kg	A mm	B mm	C mm
3500	DN100	3350	3350	1785	2855
4000	DN150	3990	3450	1810	2970
5000	DN150	5000	3765	1910	3110
6000	DN150	6200	3905	2070	3210
7000	DN150	6700	4100	2190	3270
8750	DN200	8470	4510	2420	3415

For more information please contact your Donaldson Sales Representative and visit our website at www.donaldson.com.

Donaldson.
FILTRATION SOLUTIONS

Explore our solutions
at shop.donaldson.com

Contact us

Donaldson Europe BV
Research Park No. 1303, Interleuvenlaan, 1
B-3001 Leuven, Belgien
Telefon: +32 (0) 16 38 38 11

Technical Data Sheet No. F119008 EN (12/25) Heat-Regenerated Adsorption Dryer Ultradryer HRE+.
©2025 Donaldson Company, Inc. Donaldson and the color blue are marks of Donaldson Company, Inc.
All other marks belong to their respective owners. All rights reserved.

Important Notice: Many factors beyond the control of Donaldson can affect the use and performance of Donaldson products in a particular application, including the conditions under which the product is used. Since these factors are uniquely within the user's knowledge and control, it is essential the user evaluate the products to determine whether the product is fit for the particular purpose and suitable for the user's application. All products, product specifications, availability and data are subject to change without notice, and may vary by region or country.
This document has been translated using AI. It based on German mother document.