Industrial Gases

Ultrapac™ Smart 0005-0100 Desiccant Dryer

SMART

- The new Ultrapac Smart Desiccant Dryer is your smart solution – just plug & play and it will take care of your compressed air
- The new Ultrapac Smart communicates with you – operating your dryer the smart way
- No space? No Problem! The new Ultrapac Smart will fit exactly where you need it

RELIABLE

- The new Ultrapac Smart stands for a reliable compressed air quality achievement according to ISO 8573-1:2010
- The new Ultrapac Smart stands out through its low maintenance and the extremely long life-time
- The new Ultrapac Smart stands up to the daily challenges with validated performance according to ISO 7183

EFFICIENT

- Highest efficiency with lowest consumption of regeneration air
- The Ultrapac Smart is conserving your resources while in operation
- The new Ultrapac Smart adapts its operation to your needs and switches to energy saving mode whenever beneficial

ULTRAPAC SMART

A new era in adsorption drying

With the Ultrapac™ Smart a new era in adsorption drying has begun – equipped with a lot of features to make the Ultrapac Smart the exact solution for your needs!
Rely on innovative technology when it comes to high quality compressed air needs even under challenging conditions. Validated performance and a complete new defined dryer concept designed to last.

Excellence in performance – Innovative Concept - Smart Solution – Straightforward in Operation – Flexible to meet your needs!

INDUSTRIES

- Industrial Machinery

- Packaging and Bottling

- Food Processing

- Automotive

- Energy

Technical alterations reserved (06/2026)

F117096_2026_06_EN_REV07

MODULARITY

Flexible is the new Standard!

The Ultrapac Smart impresses with a new feature that will make your operation easier. With the new modular options you can find the right position for your desiccant dryer the smart way.

The new Ultrapac Smart just fits!

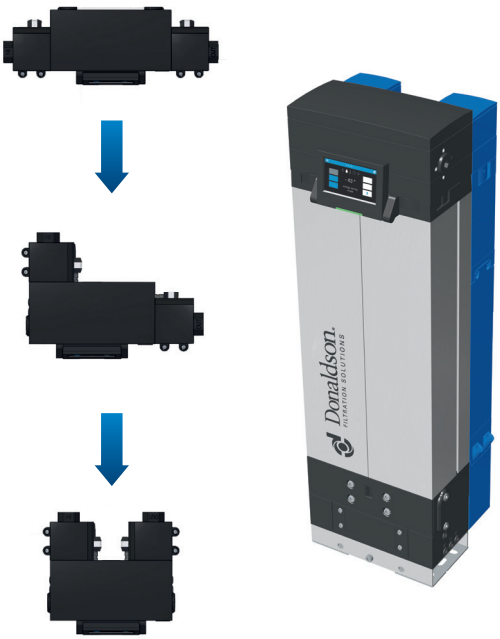

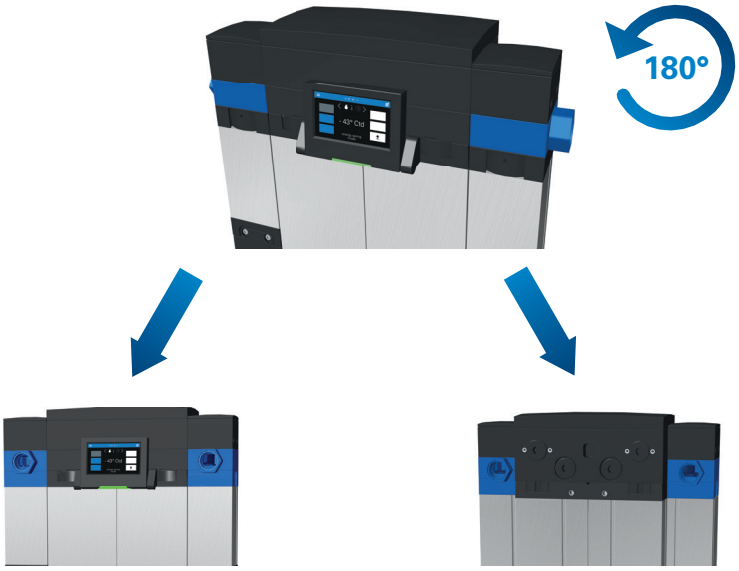

ROTATABLE INLET AND OUTLET CONNECTION

Smart and easy inlet / outlet configuration by simply rotating the connection modules to the position that will fit your site.

No modifications, no additional equipment, no investment.

VARIABLE FILTER MODULES

Smart dryer set-up. The filter modules are variable according to your needs. Space won't be a critical issue anymore.

TURNABLE DISPLAY

Smart display concept one step further. Protect your dryer display during heavy operation by easily turning it down.

With the display down, you still have the LED status light in sight.

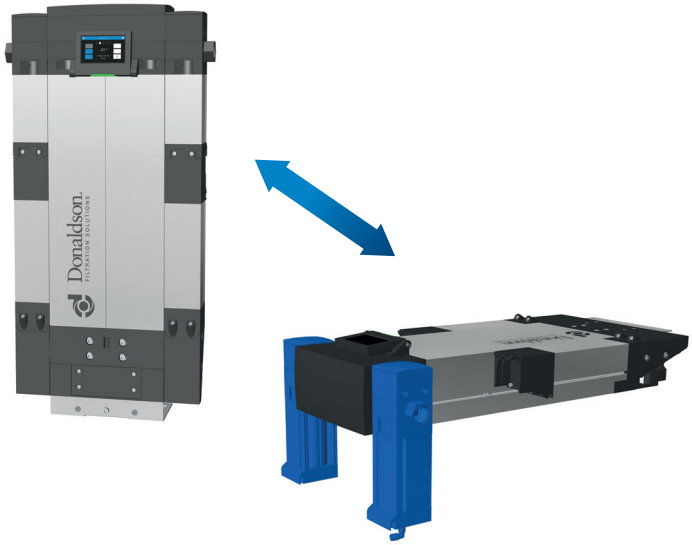

VERTICAL/HORIZONTAL OPERATION

The Ultrapac Smart can be installed either in vertical or horizontal orientation.

Even the smallest space is suitable.

INDEPENDENT DISPLAY MOUNTING

Smart placement of the display independent from the dryer itself. No matter where your dryer fits, your display is available even when the dryer is built-in.

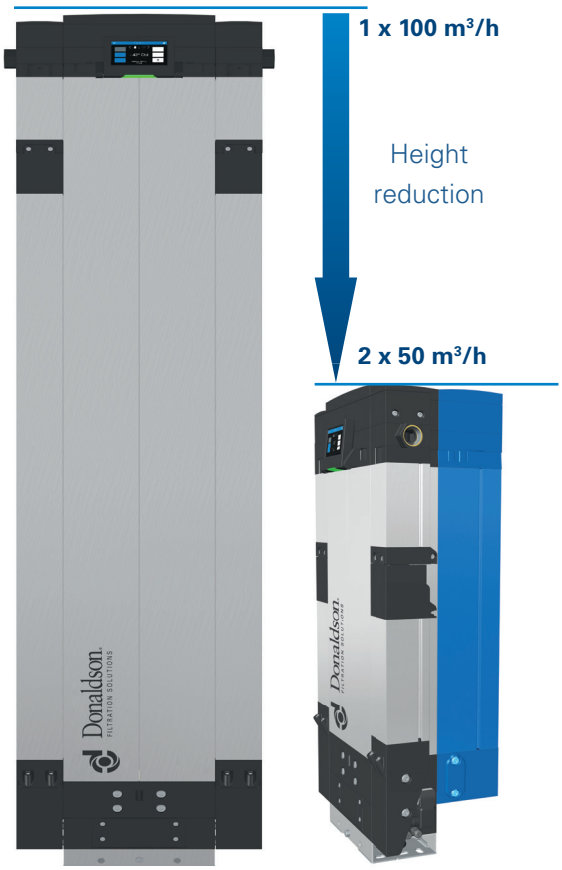

ADDITIONAL ADSORBER MODULES

With the additional adsorber modules you have the freedom to choose between height or add the adsorber modules in the back with parallel flow and halve the dryer height. Height will no longer be an issue at your operational side.

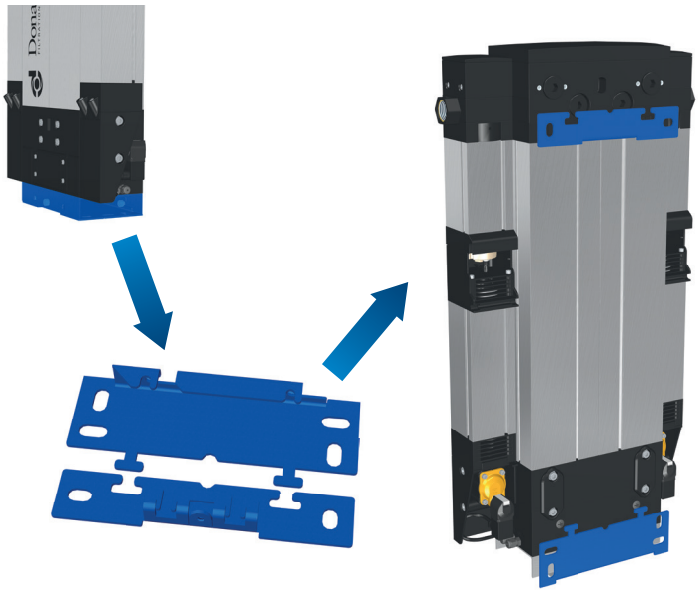

WALL BRACKET

The new Ultrapac Smart can easily be fixed on the wall. Just use the two parts of the stand for wall fixing the smart way.

INDIVIDUAL DRYER

All modular options are combinable with each other! This gives you maximum freedom in configuring your own personal dryer with all options you need. Modifications are possible at any time!

Flexible is the new Standard – The new Ultrapac Smart just fits!

ULTRASILENCER

Silent operation!

The UltraSilencer is a completely new and smart silencer concept that will reduce the sound level of the Ultrapac Smart down to 60 dB(A) and makes your operation silent you won't even notice your dryer is working!

This gives you the freedom to choose the best site to place your dryer even close to workplaces – No housing or offside placement needed!

The new Ultrapac Smart – The silent choice!

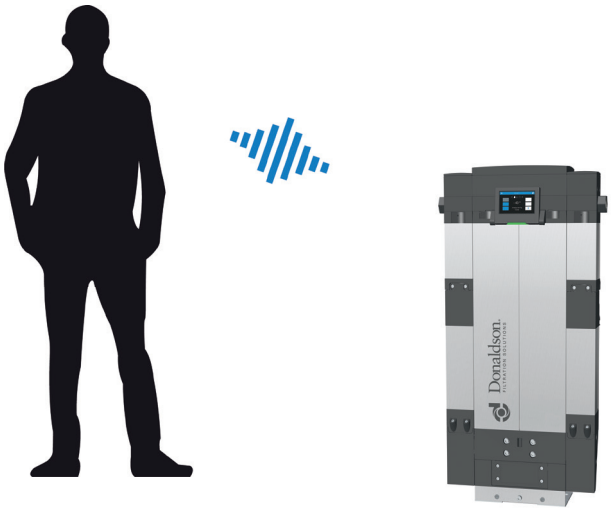

RESOURCE CONSERVING

Eco operation!

The new Ultrapac Smart is conserving your resources while in operation.

Not only the high efficient components, but also the whole dryer concept with capacity control and intermittent operation lead to highest energy savings and low consumption of regeneration air.

The new Ultrapac Smart – The profitable choice!

DESICCANT CATRIDGES

Reliable operation!

New desiccant cartridge design in consideration of free flow in compressed air dryers. The flow-optimized design with low pressure drop is resistant against pressure and flow fluctuations. The desiccant is pre-stressed with full utilization of adsorbent even at partial flow. During service the compact desiccant cartridges will be replaced one by one from the desiccant dryer, so only small replacement space is needed. This gives additional advantages for your stock management. Furthermore the high efficient cartridges give you the confidence of achieving the dew point you need!

The new Ultrapac Smart – The reliable choice!

ULTRAPLEAT FILTER ELEMENTS

Efficient operation!

The UltraPleat™ filtration technology uses a new structure of coated high-tech fibres that are processed into a pleated filter medium with a high separation efficiency of liquid particles and a huge adsorption capacity for solid particles. The multilayer structure of the new filter medium was designed so that optimal aerodynamic conditions are achieved, simultaneously providing a filter surface that is over 400% larger by comparison with wrapped filter media. For the separation of oil aerosols, an efficiency of up to ≥ 99.9% is achieved.

The new Ultrapac Smart – The efficient choice!

CONSISTENTLY SMART

Smart Design!

Efficiency

The new Ultrapac Smart is an efficient overall concept! The whole dryer and all components are flow-optimized – high efficiency at lowest pressure drop. Furthermore the intermittent operation ensures minimal consumption of regeneration air. With the dew point dependent capacity control, the Ultrapac Smart adapts regeneration cycles to your actual operation conditions and switches to energy saving mode whenever beneficial.

The new Ultrapac Smart – Conserving your resources the smart way!

Reliable

Rely on the new Ultrapac Smart when it comes to achieving high quality and clean compressed air for your operation! The new Ultrapac Smart will achieve compressed air quality according to ISO 8753-1:2010.

The plug and play solution makes it easy for you to take care of your business and having the knowledge to operate a dependable dryer with low maintenance and extremely long life time!

The new Ultrapac Smart – Reliability the smart way!

Validation

The new Ultrapac Smart is not only a promise. At Donaldson our approach is to encourage transparency by validation of our complete product portfolio. This gives you the reassuring feeling to rely on a proven concept. Furthermore it makes the performance of the Ultrapac Smart measurable and therefore comparable.

The new Ultrapac Smart – Designed the smart way!

- **Ultrapac Smart Dryer ISO 7183**
- **UltraPleat Pre and Afterfilter ISO 12500-1 and 12500-3**
- **Silencer UltraSilencer ISO 3744**

Service-friendly

The new Ultrapac Smart manifests itself through its service-friendliness. During services, the Ultrapac Smart remains firmly installed and within the pipeline, which ensures safe execution and minimum downtime. No special tools are needed and all maintenance parts are easily accessible. The overall concept is designed to keep it simple: all services are self-explanatory and extremely time-saving!

The new Ultrapac Smart – Easy service the smart way!

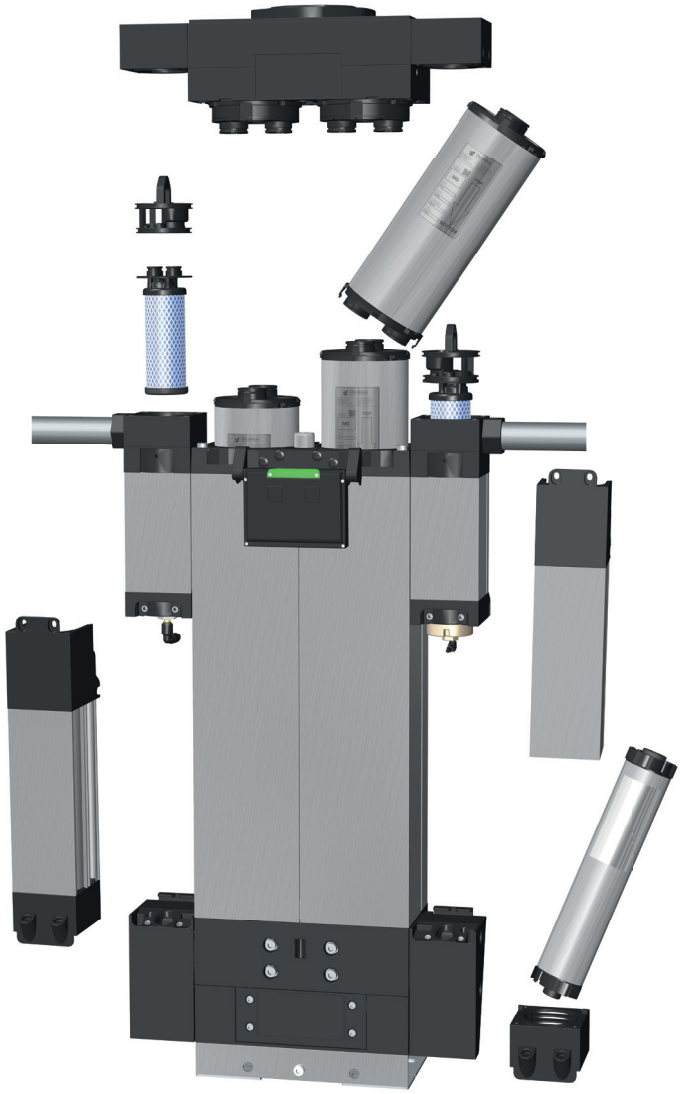

ULTRAPAC SMART VERSIONS

The perfect dryer for your needs!

The new Ultrapac Smart is available in two versions: Superplus and Standard.

All variants are highly efficient with lowest differential pressure, minimum regeneration air consumption, and intermittent operation. All models from each version ensure you the reliable achievement of compressed air quality classes according to ISO 8573-1:2010. Compile all options you need and choose the version most suitable for your operation!

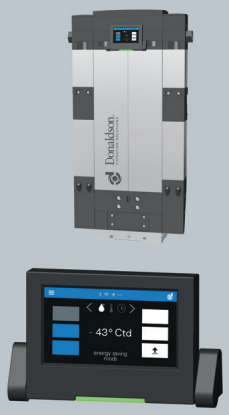

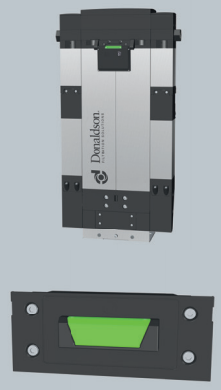

	SUPERPLUS	STANDARD
Components		
Silencer UltraSilencer	•	•
Pre- & Afterfilter UltraPleat™	•	•
LED Status Indicator	•	•
Dew point Transmitter	•	
Orifice Set	•	
Display		
Touch Display	•	
Modularity		
Rotatable Connections	•	•
Horizontal Operation	•	•
Additional Adsorber Modules	•	•
Independent Display Mounting (Option)	•	
Variable Filter Modules	•	
Wall Bracket	•	
Efficiency		
Low Differential Pressure	•	•
Low Regeneration Air Consumption	•	•
Compressed Air Quality According to ISO 8753-1:2010	•	•
Intermittent Operation	•	•
Dew Point Control	•	
Easy Service		
All Spare Parts easy accessable	•	•
No Special Tools required	•	•
Reduced Downtimes	•	•
Connectivity		
Alarm Contact	•	•
Industry 4.0 ready	•	

Donaldson. FILTRATION SOLUTIONS

ULTRAPAC SMART DIMENSIONS

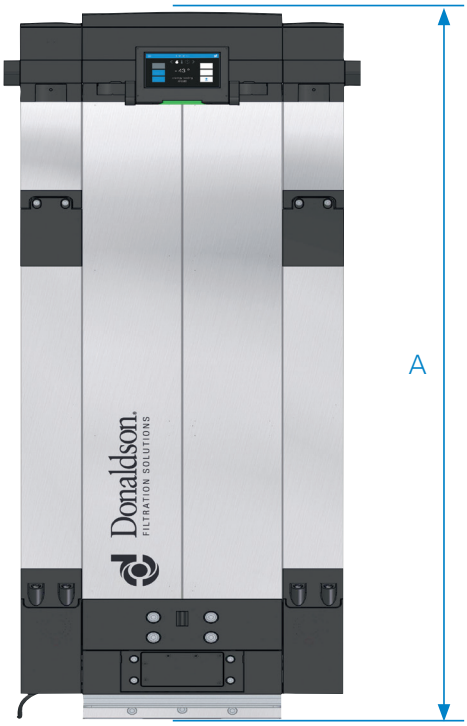

	Type	A mm		Weight kg
		Standard	Superplus	
MINI	**0005**	490	497	10
	0010	757	764	15
	0015	1024	1031	21
	0020	1291	1298	26
	0025	1558	1565	31
MIDI	**0035**	849	866	34
	0050	1113	1130	45
	0065	1377	1394	57
	0080	1641	1658	68
	0100	1905	1922	79

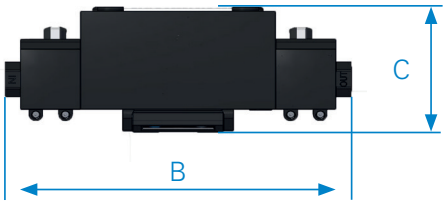

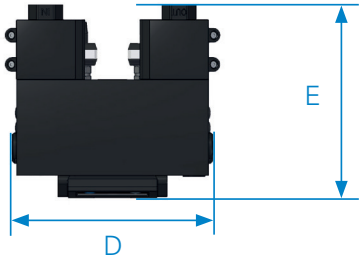

	Type	B mm	C* mm		D mm	E mm	
			Standard	Superplus		Standard	Superplus
MINI	**0005**	314	137	114	195	168	187
	0010	314	137	114	195	168	187
	0015	314	137	114	195	168	187
	0020	314	137	114	195	168	187
	0025	314	137	114	195	168	187
MIDI	**0035**	464	191	168	306	245	264
	0050	464	191	168	306	245	264
	0065	464	191	168	306	245	264
	0080	464	191	168	306	245	264
	0100	464	191	168	306	245	264

*** Total depth incl. floor holder**

PRODUCT DESCRIPTION

Function description

Compressed air is led throught the inlet of the dryer (**I**) and across the prefilter (**1**). At this stage, the air is cleaned from particles and condensate. The condensate is removed via the condensate drain (**2**). Via the lower shuttle valve (**4**), the air is led into the desiccant cartridges (**6**), in which the air is dried down to the required dew point.

Via the upper shuttle valve, the air gets into an afterfilter (**8**), in which possible particles from the desiccant are retained.

Via the outlet (**O**), the clean and dry air is led into the compressed air network to the point of use.

While one vessel with desiccant cartridge(s) is in the drying phase (adsorption), the cartridge(s) of the other vessel will be dried (regeneration).

A partial flow of dried air is expanded via an orifice and led accross the desiccant cartridge(s) for regeneration and via a solenoid valve and a silencer system (**3**) to the atmosphere.

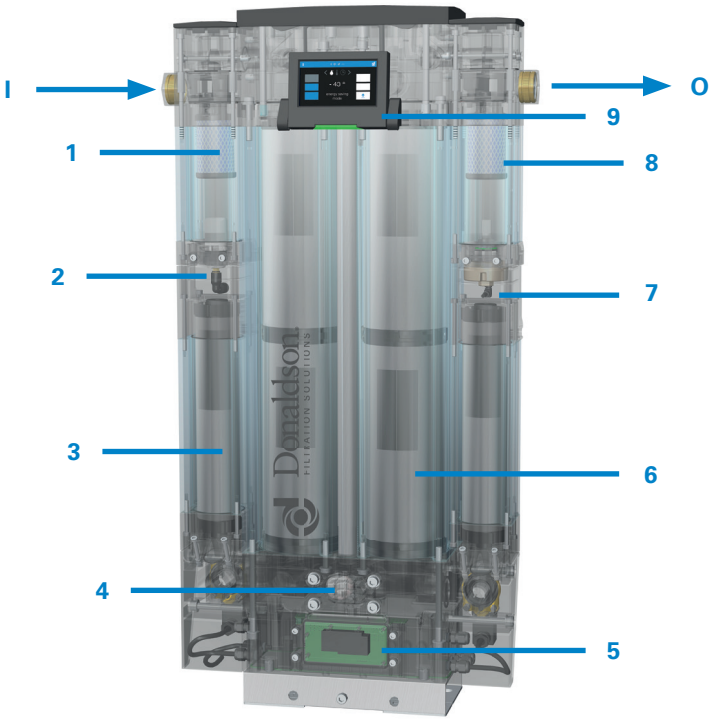

Main Components

1	Prefilter UltraPleat™	**4**	Lower Shuttle Valve	**7**	Dew Point Transmitter (Superplus)
2	Condensate Drain	**5**	Electrical Controller	**8**	Afterfilter UltraPleat™
3	Silencer UltraSilencer	**6**	Desiccant Cartridges	**9**	Touch Display (Superplus)

TECHNICAL DATA

	Type	Nominal Flow m^3/h	Connection
MINI	**0005**	5	1/2"
	0010	10	1/2"
	0015	15	1/2"
	0020	20	1/2"
	0025	25	1/2"
MIDI	**0035**	35	1"
	0050	50	1"
	0065	65	1"
	0080	80	1"
	0100	100	1"

Donaldson. FILTRATION SOLUTIONS

PRODUCT SPECIFICATION

Type	Nominal flow inlet* m³/h	Regeneration air averaged m³/h	Outlet (min.) m³/h	Prefilter UltraPleat™ S	Afterfilter UltraPleat™ S	UltraSilencer Cartridges QTY	Desiccant Cartridges QTY/Adsorber *
0005	5	0.85	3.95	0035	0035	2	2
0010	10	1.70	7.90	0035	0035	2	4
0015	15	2.55	11.85	0035	0035	2	6
0020	20	3.40	15.80	0035	0035	4	8
0025	25	4.25	19.75	0035	0035	4	10
0035	35	5.95	27.65	0070	0070	2	4
0050	50	8.50	39.50	0070	0070	2	6
0065	65	11.05	51.35	0070	0070	4	8
0080	80	13.60	63.20	0120	0120	4	10
0100	100	17.00	79.00	0120	0120	4	12

* related to the intake condition of the compressor +20 °C, 1 bar (abs), at compressed air inlet temperature of +35 °C and 7 bar (g) operating pressure.
Pressure dew point: -40 °C , minimum pressure: 4 bar (g), maximum pressure: 16 bar (g) (type 0005 to 0025), 12 bar (g) (type 0035 to 0100), inlet temperature: min +5 °C, max +55 °C (dimensioning see below)

TECHNICAL CONFIGURATION

°C / bar g	4	5	6	7	8	9	10	11	12	13	14	15	16
20	0.91	0.99	1.08	1.16	1.23	1.30	1.37	1.43	1.49	1.55	1.61	1.66	1.72
25	0.89	0.98	1.07	1.15	1.22	1.29	1.36	1.42	1.47	1.53	1.59	1.65	1.70
30	0.83	0.97	1.06	1.13	1.21	1.27	1.34	1.40	1.46	1.51	1.56	1.62	1.67
35	0.63	0.75	0.88	1.00	1.12	1.25	1.33	1.39	1.45	1.50	1.55	1.60	1.65
40	0.48	0.57	0.67	0.76	0.86	0.95	1.05	1.14	1.24	1.33	1.43	1.52	1.62
45	0.37	0.44	0.51	0.58	0.66	0.73	0.81	0.88	0.95	1.03	1.10	1.17	1.25
50	0.28	0.34	0.40	0.46	0.51	0.57	0.63	0.68	0.74	0.79	0.85	0.91	0.97
55	0.22	0.27	0.31	0.36	0.40	0.44	0.49	0.53	0.58	0.62	0.67	0.71	0.76

* Maximum operating pressure 16 bar (g) (type 0005 to 0025), 12 bar (g) (type 0035 to 0100)

Example: $\dot{V}_{nom}$ = 22 m³/h, Inlet temperature = 25 °C, Operating pressure = 12 bar (g)

$$\dot{V}_{corr} = \frac{\dot{V}_{nom}}{f} = \frac{22\ m^3/h}{1{,}47} = 14{,}97\ m^3/h$$

Calculated dryer size: Type 0015

Power Supply	220-230 VAC / 50-60Hz, 110-115 VAC / 50-60Hz, 24 VDC, +/-10%
Power Consumption	Standard: 12W / Superplus: 16W
Operating Pressure	min. 4 bar / max. 16 bar (type 0005 to 0025), 12 bar (type 0035 to 0100)
Media	Compressed Air / Nitrogen
Media Temperature	max. 55 °C
Ambient Temperature	min. 4 °C / max. 50 °C
Pressure Dew point	-40 °C at 100% nominal load / -70 °C at 70% nominal load
Sound Power Level acc. to DIN EN ISO 3744	60 dB(A)
Declaration of Conformity	acc. 2014/35/EU and 2014/68/EU

Donaldson. FILTRATION SOLUTIONS

For more information please contact your Donaldson Sales Representative and visit our website at **www.donaldson.com**.

Donaldson.
FILTRATION SOLUTIONS

Explore our solutions
at shop.donaldson.com

Contact us

Donaldson Europe BV
Research Park No. 1303, Interleuvenlaan, 1
B-3001 Leuven, Belgium
Telephone: +32 (0) 16 38 38 11

Technical Data Sheet No. F117096 EN (06/26) Ultrapac Smart Dryer.
©2026 Donaldson Company, Inc. Donaldson, UltraPleat and the color blue are marks of Donaldson Company, Inc.
All other marks belong to their respective owners. All rights reserved.

IMPORTANT NOTICE: Many factors beyond the control of Donaldson can affect the use, performance, or results of Donaldson products or services in a particular application, including the conditions impacting how the products or services are selected, used, installed, or maintained. Because these factors are uniquely within the user's knowledge and control, it is essential the user evaluate both the products and any related services to determine their suitability for the user's intended purpose and application, including fitness for the particular purpose. All products, services, product specifications, availability and data are subject to change without notice and may vary by region or country.